03-2013

Installation Systems Main Catalogue

Contact

fischerwerke GmbH & Co. KG
Weinhalde 14–18
72178 Waldachtal
Germany

Tel.: +49 (0) 7443 12-0
Fax: +49 (0) 7443 12-4222

www.fischer.de
info@fischer.de

Your dealer:

103746 · 03/2013 · MP · Printed in Germany

Installation Systems Main Catalogue

www.fischer.de

fischer
innovative solutions

SaMontec

fischer
innovative solutions

The information in this catalogue is intended for general guidance only and is given without engagement. Additional information and advice on specific applications is available from our Technical Support Team. For this however, we require a precise description of your particular application.
All the data in this catalogue concerning work with our fixing elements must be adapted to suit local conditions and the type of materials in use.
If no detailed performance specifications are given for certain articles and types, please contact our Technical Service Department for advice.

fischerwerke GmbH & Co. KG
72178 Waldachtal
Germany

We cannot be responsible for any errors, and we reserve the right to make technical and range modifications without notice. No liability is accepted for printing errors and omissions.

© fischerwerke
Printed in Germany

103746 · 03/2013 · MP

fischer
innovative solutions

Dear Partners,

Technical requirements for buildings are increasing steadily. Today, more and more installations are needed to ensure the optimum functioning of a building. The secure guidance and attachment of all types of media lines plays a particularly important role here.

With this in mind, we have expanded our range of installation and fastening elements for structural engineering. We have taken a lot of comments from practice on board and incorporated them into our systems development. Part of our special service is to offer practical solutions that will make your everyday work easier.

In our new main catalogue for installation systems, we are pleased to present the SaMontec (HVAC installations), E-fix (electrical fastenings) and sanitary ware fastening ranges in a clearly laid out format. The new user-orientated chapter structure puts all the different articles for one system together and simplifies the search for the elements you need.

Our complete range now also fulfils the highest requirements for fixing heavy loads. The fischer universal rail system FUS has been expanded significantly and the addition of new material qualities to the stainless steel range gives you further major usage benefits.

We want to offer you the most useful products possible for your daily work. With our expanded range, we can offer you installation systems that are incredibly easy to use and extremely cost-effective. Please continue to support us with your comments so that we can continue to improve our systems and processes. We look forward to continuing our successful cooperation.

Yours sincerely,

Klaus Fischer

fischer Subsidiaries

fischer Deutschland Vertriebs GmbH
Weinhalde 14-18
72178 Waldachtal
GERMANY
Tel.: (0049) 744312-6000
Fax: (0049) 744312-4500
www.fischer.de
E-Mail: info@fischer.de
anwendungstechnik@fischer.de
vertriebsinnendienst@fischer.de

fischer Argentina S.A.
Armenia 3044
1605 Munro
Ra-PCIA: De Buenos Aires
ARGENTINA
Tel.: (0054) 1147-622778
Fax: (0054) 1147-561311
www.fischer.com.ar
E-Mail: asistenciatecnica@fischer.com.ar

fischer Australia Pty. Ltd.
Unit 1, 61 Waterview Close
Dandenong South
VIC 3175
AUSTRALIA
Tel.: (0061) 39799-2096
Fax: (0061) 39799-2696
www.fischerfixings.com.au
E-Mail: info@fischerfixings.com.au

fischer Austria GmbH
Wiener Straße 95
2514 Traiskirchen
AUSTRIA
Tel.: (0043) 225253730
Fax: (0043) 225253730-70
www.fischer.at
E-Mail: office@fischer.at

fischer Cobemabel s.n.c.
Schaliënhoevedreef 20 D
2800 Mechelen
BELGIUM
Tel.: (0032) 152847-00
Fax: (0032) 152847-10
www.fischer.be
E-Mail: info@fischerbelgium.be

fischer Brasil Indústria e Comércio Ltda.
Estrada do Dende, 300 Ilha do Governador
BR-21920-001 Rio de Janeiro-RJ
BRAZIL
Tel.: (0055) 21 24 67 87 96
Fax: (0055) 21 24 67 11 30
www.fischerbrasil.com.br
E-Mail: fischer@fischerbrasil.com.br

fischer (Taicang) fixings Co., Ltd.
Shanghai Rep. Office
Rm 1503-1504,
No. 63 Chifeng Road,
200092 Shanghai
CHINA
Tel.: (0086) 2151001668
Fax: (0086) 2165979669
www.fischer.com.cn
E-Mail: ficnsh@fischer.com.cn

fischer Hrvatska d.o.o.
Nadinska 29 · Velikopoje
10010 Zagreb
CROATIA
www.fischer.ar
E-Mail: alen.dopsaj@fischer.at

fischer international s.r.o.
Průmyslová 1833
25001 Brandýs nad Labem
CZECH REPUBLIC
Tel.: +(00420) 3269046-01
Fax: (00420) 3269046-00
www.fischer-cz.cz
E-Mail: info@fischerwerke.cz

fischer a/s
Sandvadsvej 17 A
4600 Køge
DENMARK
Tel.: (0045) 4632-0220
Fax: (0045) 4632-5052
www.fischerdanmark.dk
E-Mail: fidk@fischerdanmark.dk

fischer Finland
Suomalaistentie 7 B
02270 Espoo
FINLAND
Tel.: (00358) 2074146-60
Fax: (00358) 2074146-69
www.fischer.de
E-Mail: jorma.makkonen@fischerfinland.fi

fischer S.A.S.
12, rue Livio B. P. 10182
67022 Strasbourg-Cedex
FRANCE
Tel.: (0033) 38839-1867
Fax: (0033) 38839-8044
www.fischer.fr
E-Mail: info@fischer.fr

fischer fixings UK Limited
Whitely Road
Oxon OX10 9AT Wallingford
OX 10 9AT
GREAT BRITAIN
Tel.: (0044) 149 182 79-00
Fax: (0004) 149 182 79-53
www.fischer.co.uk
E-Mail: info@fischer.co.uk

fischer Hellas
Emporiki EPE G, Papandreou 125
144 52 Metamorphosis, Athens
GREECE
www.fischer.gr

fischer HUNGÀRIA Bt.
Szerémi út 7.
1117 Budapest
HUNGARY
Tel.: (0036) 134797-55
Fax: (0036) 134797-65
www.fischerhungary.hu
E-Mail: info@fischerhungary.hu

fischer italia s.r.l.
Corso Stati Uniti, 25
Casella Postale 391
35127 Padova Z.I. Sud
ITALY
Tel.: (0039) 0498063-111
Fax: (0039) 0498063-401
www.fischeritalia.it
E-Mail: sercli@fischeritalia.it

fischer Japan K.K.
Seishin Kudan Building 3rd Floor
3-4-15 Kudan Minami
Chiyoda-ku
Tokyo 102-0074
JAPAN
Tel.: (0081) 503675-7782
Fax: (0081) 503675-7782
www.fischerjapan.co.jp
E-Mail: georg.lenz@fischerjapan.co.jp

fischer Sistemas de Fijación, S.A. de C.V.
Blvd. Manuel Avila Camacho 3130 - 400B
Col. Valle Dorado, Tlalnepantla
Estado de Mexico, C.P. 54020
MEXICO
Tel.: (0052) 555572-0883
Fax: (0052) 555572-1590
www.fischer.de
E-Mail: info@fischermex.com.mx

fischer Benelux B.V.
Amsterdamsestraatweg 45 B/C
1411 AX Naarden
NETHERLANDS
Tel.: (0031) 3569566-66
Fax: (0031) 3569566-99
www.fischer.nl
E-Mail: info@fischer.nl

fischer Norge AS
Oluf Onsumsvei 9
0680 OSLO
NORWAY
Tel.: (0047) 232427-10
Fax: (0047) 232427-13
www.fischernorge.no
E-Mail: jmo@fischernorge.no

fischerpolska Sp. z o.o.
ul. Albatrosow 2
30-716 Kraków
POLAND
Tel.: (0048) 1229008-80
Fax: (0048) 1229008-88
www.fischerpolska.pl
E-Mail: info@fischerpolska.pl

fischerwerke Portugal , Lda
Av. Casal da Serra , Lote I-4, Sala 5
2625-085 Povoa de Santa Iria
PORTUGAL
Tel.: (00351) 2195-37450
Fax: (00351) 2195-91390
www.fischer.pt
E-Mail: fischerportugal.info@fischer.es

000 fischer Befestigungssysteme Rus
I. Dokukina 16/1, Building 1
129226 Moscow
RUSSIA
Tel.: (007) 495 223-0334
Fax: (007) 495 223-0334
www.fischerfixings.ru
E-Mail: info@fischerfixings.ru

fischer systems Asia Pte. Ltd.
150 Kampong Ampat
#04-03 KA Centre
Singapore 368324
SINGAPORE
Tel.: (0065) 6285-2207
Fax: (0065) 6285-8310
www.fischer.sg
E-Mail: sales@fischer.sg

fischer S. K. s. r. o.
Vajnorská 134/A
831 04 Bratislava
SLOVAKIA
Tel.: (0421) 2 4920 6046
Fax: (0421) 2 4920 6044
E-Mail: info@fischerwerke.sk
www.fischer-sk.sk

fischer Korea Co. Ltd.
#503 Dae-Ryung Techno Town 8th 481-11
Gasan-dong, Geumcheon-Gu
153-775 SEOUL
SOUTH KOREA
Tel.: (0082) 154489-55
Fax: (0082) 154489-03
www.fischerkorea.com
E-Mail: info@fischerkorea.com

fischer Ibérica S.A.
Klaus Fischer 1
43300 Mont-Roig del Camp
Tarragona
SPAIN
Tel.: (0034) 9778387-11
Fax: (0034) 9778387-70
www.fischer.es
E-Mail: tacos@fischer.es

fischer Metal Sanayi ve Ticaret Limited Sirketi
Yeni yol Sokak
ETAP Is Merkezi. A Blok
No: 16/9
34722 Hasanpasa / Kadikoy
Istanbul
Tel.: (0090) 216 326 0066
Fax: (0090) 216 326 0018

fischer Sverige AB
Koppargatan 11
602 23 Norrköping
SWEDEN
Tel.: (0046) 1131-4450
Fax: (0046) 1131-1950
www.fischersverige.se
E-Mail: gg@fischersverige.se

fischer FZE
P. O. Box 261738
Jebel Ali Free Zone
Dubai
UNITED ARAB EMIRATES
Tel.: (00971) 488374-77
Fax: (00971) 1488374-76
www.fischer.ae
E-Mail: fixings@fischer.ae

fischer fixings LLC
62 Orange Ave
Suffern, NY 10901
USA
Tel.: (001) 845-5045098
Fax: (001) 845-6252666
www.fischerfixings.com
E-Mail: info@fischerfixingsusa.com

Advantage for professionals:

THE FISCHER INTERNATIONAL CATALOGUE

The fischer International Catalogue offers lots of facts and helps with fast and secure product selection. Over 300 pages of

- Product descriptions with advantages/benefits overview
- Installation tips
- Application aids
- Detailed technical data
- Fundamentals of fastening technology

In short: everything that the professional needs to know about fastening.

Don't wait. Start!
Request a international catalogue
on the Hotline +49(0) 180 5 202901
or by fax +49 (0) 7443 12-4500

fischer Product Online Catalogue

fischer Product Online Catalogue

Your advantages

- Latest product information with continuous updating and/or expansion.
- Clear organization based on the printed catalogue.
- Simple navigation within the catalogue.
- Access to all important technical data, load tables and approvals.
- Technical tables separated according to materials with reference to current approvals.
- Compare the products in clear tables.
- Put your own catalogue together using the PDF export function – a PDF file will be generated from the current database.
- Product search allows you fast, direct access to product information.
- Looking for approvals? Under "Technical Documents" you will find the current document you are looking for with data on the approval number, validity and language version.

www.fischer.de

Fixing Systems – Products heading

Services that connect us

fischer SaMontec 3.2 Calculation software

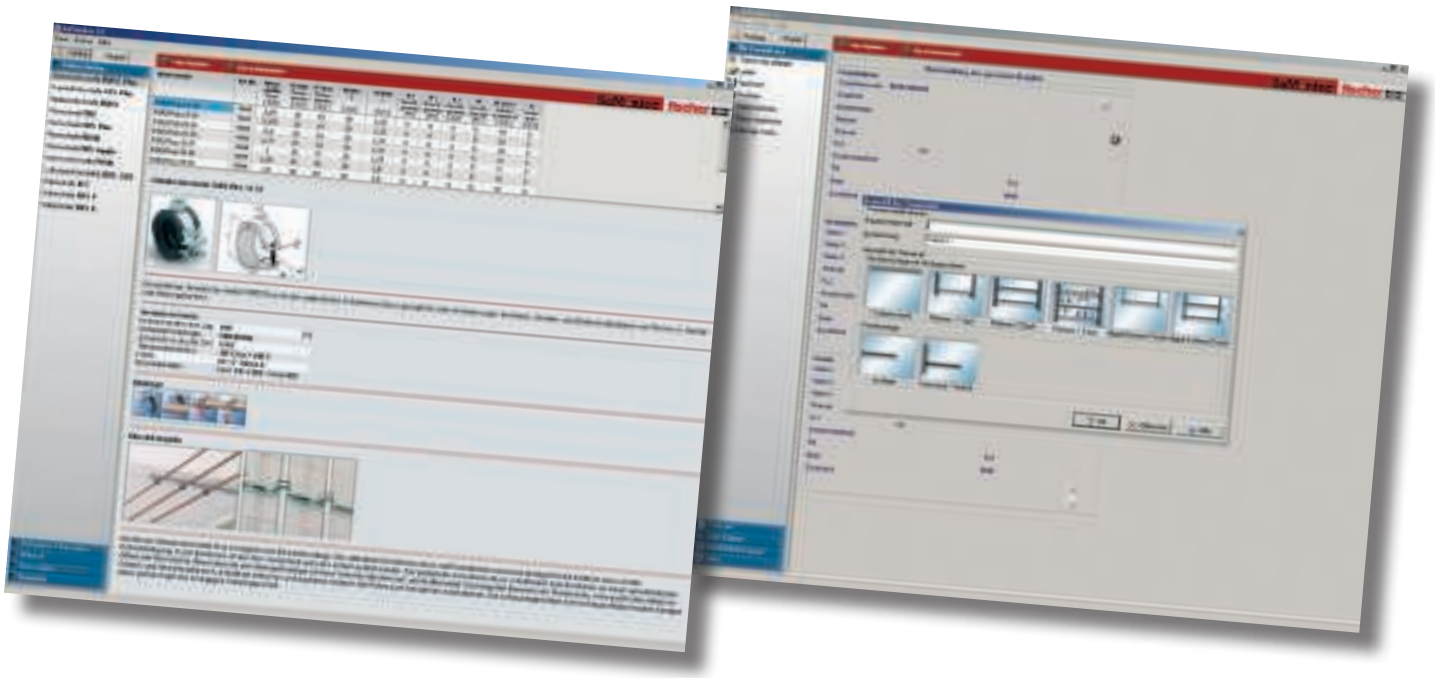

fischer SaMontec 3.2

YOUR ADVANTAGES

- All necessary data are input under consideration of current DIN values (nominal width, insulation thicknesses etc.).
- Continuous planning control using continuous background calculation.
- Project arrangement using an integrated project database.
- The current version is always available on the Internet using live update.
- Multiple language function that can be switched (calculate in one language, print out in another).

APPLICATION

- Calculation of complete pipelines in the installation area.
- Layout of various designs.
- Technical layout of the fischer SaMontec system (pipe clamps, rails etc.)

Order now, free of charge, at:

info@fischer.de or call us on: +49 (0) 7443 12-4749

Units and formulas

BASIC VARIABLES AND BASIC UNITS

Basic variable	Length	Weight	Time	electrical current intensity	Thermodynamic temperature	Substance quantity	Light intensity
Formula symbol	l	m	t	I	T	n	I_v
Basic unit	Meter	Kilogram	Second	Ampere	Kelvin	Mol	Candela
Unit symbol	m	kg	s	A	K	mol	cd

VARIABLES AND UNITS

Size	Formula symbol	Unit SI	others	related	Note
Length	l	m		1 m = 10 dm = 100 cm = 1.000 mm 1 mm = 1.000 µm 1 km = 1.000 m	1 inch = 1 Zoll = 25.4 mm
Area	A, S	m^2	a, ha	1 m^2 = 10.000 cm^2 = 1.000.000 m^2 1 a = 100 m^2 1 ha = 100 a = 10.000 m^2	
Volume	V	m^3	l	1 m^3 = 1.000 dm^3 = 1.000.000 cm^3 1 l = 1 dm^3 = 0.001 m^3 1 ml = 1 cm^3	
Time	t	s	min, h, d	1 min = 60 s 1 h = 60 min = 3.600 s 1 d = 24 h	
Frequency	f	Hz		1 Hz = 1/s	
Speed	v	m/s	m/s, km/h	1 m/s = 3.6 km/h	
Acceleration	a, g	m/s^2		g = 9.81 m/s^2	Formula symbol g for gravity only
Weight	m	kg	g, t	1 kg = 1.000 g 1 t = 1.000 kg	
Density	ρ	kg/m^3		1.000 kg/m^3 = 1 t/m^3 = 1 kg/dm^3	
Moment of inertia, 2nd degree	J	kg • m^2			Previously: mass moment of inertia
Force	F	N		1 N = 1 kg • m/s^2	Previously: kp (Kilopond) 1 kp = 9.80665 kgm/s^2 = 9.81 N
Torque	M	N • m			
Bending moment	M_b	N • m			
Torsion moment	T	N • m			
Mechanical tension	σ, τ	N/m^2			
Area-wise moment, 2nd degree	I	m^4			Previously: area moment of inertia
Energy, work	E, W	J		1 J = 1 N • m = 1 W • s	in former times: cal (Calorie) 1 cal = 4.1868 Ws = 4.19 J
Power	P	W		1 W = 1 J/s = 1 N • m/s	in former times: PS (Horse power) 1 PS = 75 kpm/s = 75 • 9.81 N/ms = 0.736 kW
Thermodynamic temperature	T	K		0 °C = 273 K; -273 C = 0 K	
Heat quantity	Q	J	(Wh)	1 J = 1 W • s = 1 N • m	
Specific heat value	H	J/kg			
Substance quantity	n	mol		1 mol corresponds to approx. 6 • 10^{23}	
Light intensity	I_v	cd			

CARBON STEEL QUALITIES CORRESPONDANCE BETWEEN EUROPEAN AND AMERICAN STANDARDS

DIN EN ISO			ASTM
Description	Material no.		
DD11	1.0332	DIN EN 10111	A 569
DC01	1.0330	DIN EN 10130	A 366
St 22	1.0320	DIN 1614-1	n/a
DX51D+Z 275 MA-C	1.0226+Z	DIN EN 10327	A 653/CQ
S235JR	1.0037	DIN EN 10025	A 283
S 355 MC	1.0976	DIn EN 10149	n/a
4.6; 4,8; 8,8	DIN EN ISO 898-1		F 568M

SaMontec advertising material

Art. No. 45177 (international)

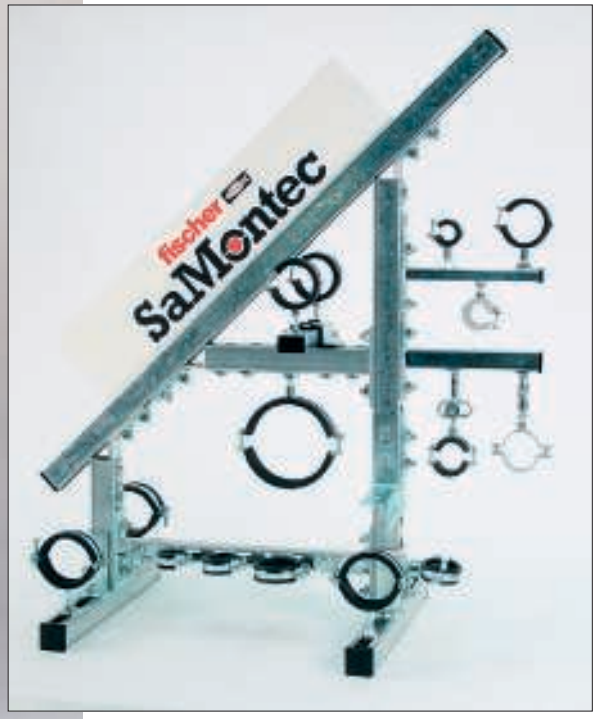

Art. No. 68422

SERVICE PAGES 3–11

PIPE CLAMPS PAGES 12–35

INSTALLATION SYSTEM **MS-L** PAGES 36–49

INSTALLATION SYSTEM **MS** PAGES 50–71

INSTALLATION SYSTEM **FUS** PAGES 72–95

INSTALLATION GRID PAGES 96–103

FIXPOINT AND SLIDING ELEMENTS PAGES 104–115

AIR DUCT AND METAL ROOF FIXINGS PAGES 116–125

ACCESSORIES PAGES 126–147

INSTALLATION SYSTEM HOT-DIPPED GALVANISED PAGES 148–153

STAINLESS STEEL INSTALLATION SYSTEM
PIPE CLAMPS A2/A4
MS-L A2
FUS A2/A4 PAGES 154–167

AIR CONDITIONER FIXINGS PAGES 168–173

ELECTRICAL FIXINGS **E-FIX** PAGES 174–193

SANITARY FIXINGS PAGES 194–203

PLUGS AND ANCHORS PAGES 204–259

Pipe Clamps

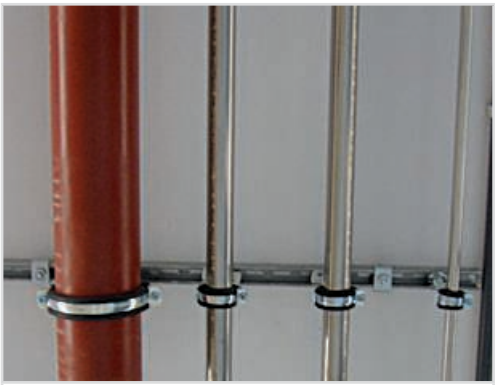

A complete range for installation of piping systems like:

- heating, ventilation, air conditioning
- sanitary and waste water
- compressed air, technical gases, production liquids
- gas
- sprinkler
- steam pipelines
- medical fluids
- electrical conduits
- cooling

One screw
FGRS Plus **Page 16**

Two screws
FRS Plus **Page 20**

Heavy duty
FRS-F **Page 25**

Insulated
KFT **Page 28**

Sprinkler
FRSP **Page 32**

Others
ETR **Page 34**

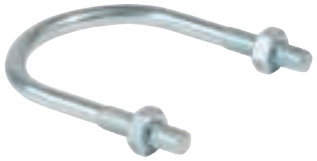

FGRS **Page 18**

FKS Plus **Page 19**

FRS **Page 22**

FRSH **Page 23**

FRSN **Page 24**

FRSM **Page 26**

FRSM metric nut **Page 27**

FRS K **Page 30**

FRSL **Page 33**

SGS **Page 35**

Pipe types

BOILER PIPE ACC. TO DIN 2448 / DIN EN 10220

DN	Size	Pipe outer-Ø [mm]	Pipe weight empty [kg/m]	Pipe weight water filled [kg/m]	Pipe weight water filled + insulated 1) [kg/m]	Support widths [m]
8	1/4"	13.5	0.5	0.6	1.4	2.00
10	3/8"	17.2	0.7	0.8	1.9	2.25
15	1/2"	21.3	1.0	1.2	2.2	2.75
		25.0	1.1	1.5	2.8	2.75
20	3/4"	26.9	1.4	1.8	3.1	3.00
		30.0	1.8	2.3	4.0	3.00
		31.8	1.9	2.4	4.2	3.00
25	1"	33.7	2.0	2.6	4.7	3.50
		38.0	2.3	3.1	5.2	3.50
32	1 1/4"	42.4	2.6	3.7	5.7	3.75
		44.5	2.7	3.9	6.9	3.75
40	1 1/2"	48.3	3.0	4.4	7.4	4.25
		51.0	3.1	4.8	7.7	4.40
		57.0	3.9	6.0	10.0	4.60
50	2"	60.3	4.1	6.5	10.5	4.75
		63.5	4.4	7.0	11.0	4.75
		70.0	4.8	8.1	13.4	4.75
65	2 1/2"	76.1	5.3	9.2	14.8	5.50
		82.5	6.3	10.9	19.2	5.75
80	3"	88.9	6.8	12.2	20.4	6.00
		101.6	8.8	15.8	27.0	6.00
		108.0	9.3	17.3	29.1	6.00
100	4"	114.3	9.9	18.9	30.6	6.00
		127.0	12.2	23.3	36.1	6.00
		133.0	12.8	25.1	37.8	6.00
125	5"	139.7	13.5	27.1	40.3	6.00
		152.4	16.5	32.7	47.1	6.00
		159.0	17.3	34.9	49.2	6.00
150	6"	165.1	17.9	37.1	52.0	6.00
		168.3	18.3	38.2	53.0	6.00
		177.8	21.4	43.6	58.1	6.00
		193.7	25.2	51.5	68.0	6.00
200	8"	219.1	31.2	65.0	83.3	6.00
		244.5	37.2	79.5	98.6	6.00
		267.0	40.8	91.6	112.7	6.00
250	10"	273.0	41.6	94.9	117.7	6.00
300	12"	323.9	55.6	131.0	156.6	6.00

STAINLESS STEEL PIPE ACC. TO DIN EN ISO 1127

DN	Size	Pipe outer-Ø [mm]	Pipe weight empty [kg/m]	Pipe weight water filled [kg/m]	Pipe weight water filled + insulated 1) [kg/m]	Support widths [m]
10		17.2	0.6	0.8	1.8	1.3
15		21.3	1.0	1.2	2.3	1.5
20		26.9	1.3	1.7	2.9	2.0
25		33.7	1.6	2.3	4.3	2.3
32		42.4	2.0	3.2	5.2	2.8
40		48.3	2.3	3.9	6.8	3.0
50		60.3	2.9	5.4	9.5	3.5
65		76.1	3.7	7.8	13.5	4.3
80		88.9	4.4	10.0	18.2	4.8
100		114.3	7.3	16.6	28.3	5.0
125		139.7	8.9	23.1	36.4	5.0
150		168.3	13.2	34.1	48.9	5.0
200		219.1	17.3	52.8	71.2	5.0
250		273.0	21.6	80.1	100.9	5.0
300		323.9	25.7	108.1	132.0	5.0
400		406.4	32.3	162.0	190.6	5.0
500		508.0	40.4	243.1	279.8	5.0

1) Heat insulation: density 120 kg/m³ + sheet metal jacket: density 7865 kg/m³
2) Heat insulation: density 120 kg/m³
The corresponding pipe manufacturer's data are to be considered.

THREADED PIPE ACC. TO DIN 2440 / DIN EN 10255

DN	Size	Pipe outer-Ø [mm]	Pipe weight empty [kg/m]	Pipe weight water filled [kg/m]	Pipe weight water filled + insulated 1) [kg/m]	Support widths [m]
8	1/4"	13.5	0.7	0.7	1.6	2.00
10	3/8"	17.2	0.9	1.0	2.0	2.25
15	1/2"	21.3	1.2	1.4	2.5	2.75
20	3/4"	26.9	1.6	2.0	3.2	3.00
25	1"	33.7	2.4	3.0	5.1	3.50
32	1 1/4"	42.4	3.1	4.2	6.2	3.75
40	1 1/2"	48.3	3.6	5.0	8.0	4.25
50	2"	60.3	5.1	7.3	11.4	4.75
65	2 1/2"	76.1	6.5	10.2	15.9	5.50
80	3"	88.9	8.5	13.6	21.8	6.00
100	4"	114.3	12.1	20.8	32.5	6.00
125	5"	139.7	16.2	29.5	42.7	6.00
150	6"	165.1	19.2	38.2	53.1	6.00

COPPER PIPE ACC. TO DIN EN 1057

DN	Size	Pipe outer-Ø [mm]	Pipe weight empty [kg/m]	Pipe weight water filled [kg/m]	Pipe weight water filled + insulated 2) [kg/m]	Support widths [m]
8	10 x 1	10	0.3	0.3	0.4	1.00
10	12 x 1	12	0.3	0.4	0.5	1.25
12	15 x 1	15	0.4	0.5	0.8	1.25
15	18 x 1	18	0.5	0.7	1.0	1.50
20	22 x 1	22	0.6	0.9	1.3	2.00
25	28 x 1.5	28	1.1	1.6	2.4	2.25
32	35 x 1.5	35	1.4	2.2	3.1	2.75
40	42 x 1.5	42	1.7	2.9	4.4	3.00
50	54 x 2	54	2.9	4.9	7.3	3.50
	64 x 2	64	3.5	6.3	9.8	4.00
65	76.1 x 2	76.1	4.1	8.2	14.0	4.25
80	88.9 x 2	88.9	4.9	10.5	16.4	4.75
100	108 x 2.5	108	7.4	15.7	27.5	5.00

STAINLESS STEEL PRESSURE SYSTEM

DN	Size	Pipe outer-Ø [mm]	Pipe weight empty [kg/m]	Pipe weight water filled [kg/m]	Pipe weight water filled + insulated 2) [kg/m]	Support widths [m]
12	15 x 1	15	0.3	0.5	0.8	1.50
15	18 x 1	18	0.4	0.6	1.0	1.50
20	22 x 1.2	22	0.6	0.9	1.3	2.50
25	28 x 1.2	28	0.8	1.3	2.4	2.50
32	35 x 1.5	35	1.2	2.0	3.1	3.50
40	42 x 1.5	42	1.5	2.7	4.4	3.50
50	54 x 1.5	54	2.0	4.0	7.3	3.50
65	76.1 x 2	76.1	3.6	7.6	14.0	5.00
80	88.9 x 2	88.9	4.2	9.8	16.4	5.00
100	108 x 2	108	5.1	13.5	27.5	5.00

METAL COMPOSITE PIPE

DN	Size	Pipe outer-Ø [mm]	Pipe weight empty [kg/m]	Pipe weight water filled [kg/m]	Pipe weight water filled + insulated 2) [kg/m]	Support widths [m]
10	14 x 2	14	0.1	0.2	0.4	1.0
12	16 x 2.25	16	0.1	0.2	0.5	1.0
15	20 x 2.5	20	0.2	0.4	0.7	1.0
20	26 x 3	26	0.3	0.6	0.9	1.5
25	32 x 3	32	0.4	0.9	1.2	2.0
32	40 x 3.5	40	0.6	1.5	2.1	2.0
40	50 x 4	50	0.9	2.3	3.2	2.5
50	63 x 4.5	63	1.3	3.6	5.2	2.5

DRAIN PIPE, CAST IRON, SML, DIN EN 877

DN	Pipe outer-Ø [mm]	Pipe weight empty [kg/m]	Pipe weight water filled [kg/m]	Support widths [m]
40	48	3.1	4.5	1)
50	58	4.3	6.4	1)
70	78	5.9	9.9	1)
80	83	6.1	10.6	1)
100	110	8.4	17.7	1)
125	135	11.8	24.5	1)
150	160	14.1	32.3	1)
200	210	23.1	54.6	1)
250	274	33.3	87.7	1)
300	326	43.2	120.8	1)
400	429	60.0	193.3	1)
500	532	82.6	290.1	1)

DRAIN PIPE, PVC-U, DIN 8062

DN	Pipe outer-Ø [mm]	Pipe weight empty [kg/m]	Pipe weight water filled [kg/m]	Support widhts 20° [m]	40° [m]
40	50	0.8	1.3	0.8	0.6
50	63	1.3	2.0	1.1	0.7
65	75	1.8	3.9	1.3	0.8
80	90	2.6	3.9	1.3	0.8
100	110	3.9	8.0	1.6	1.0
125	125	5.0	12.4	1.8	1.1
150	160	8.2	18.0	2.2	1.2

LORO-X STEEL DRAIN PIPE

DN	Pipe outer-Ø [mm]	Pipe weight empty [kg/m]	Pipe weight water filled [kg/m]	Support widths [m]
40	42	1.5	2.7	1)
50	53	2.2	4.2	1)
70	73	3.3	7.1	1)
80	89	4.1	9.9	1)
100	102	5.8	13.3	1)
125	133	9.6	22.5	1)
150	159	11.5	30.1	1)
200	219	21.5	57.2	1)
250	273	22.5	78.5	1)
300	324	25.0	104.4	1)

DRAIN PIPE, PE, DIN 19535

DN	Pipe outer-Ø [mm]	Pipe weight empty [kg/m]	Pipe weight water filled [kg/m]	Support widths [m]
25	32	0.3	0.8	0.5
32	40	0.3	1.3	0.5
40	50	0.4	2.0	0.8
50	56	0.5	2.5	0.8
57	63	0.6	3.1	0.8
70	75	0.7	4.4	0.8
80	90	1.0	6.4	0.9
100	110	1.4	9.5	1.1
125	125	1.8	12.3	1.3
125	140	2.3	15.4	1.4
150	160	3.0	20.1	1.6
200	200	3.8	31.5	2.0
250	250	6.0	49.2	2.0

DRAIN PIPE, GA, DIN 19500

DN [mm]	Pipe outer-Ø [mm]	Wall thickness [mm]	Pipe weight empty [kg/m]	Pipe weight water filled [kg/m]	Support widths [m]
50	60	3.5	5.19	7.39	1)
70	80	3.5	7.02	11.21	1)
100	112	4.0	11.33	19.83	1)
125	137	4.0	13.96	27.03	1)
150	162	5.0	20.59	38.74	1)
200	212	6.0	32.42	63.84	1)

Note:
The values for the max. support widths are based on the permissible deflection under load of the pipes and the corresponding recommendations from the pipe manufacturer. The permissible loads of the pipe fasteners and mountings are not taken into consideration.

1) approx. 1.50 m – 2.00 m.
According to the manufacturer's data, each pipe length should be supported in at least two places.

The corresponding data from the pipe manufacturer are to be taken into consideration.

Hinged pipe clamp FGRS Plus

OVERVIEW

FGRS Plus

FGRS Plus M8/M10

Properties:

Material	Steel DD11 (material no. 1.0332) acc. to DIN EN 10111
Zinc plating	Electro zinc plated, 5 - 9 µm
Connecting nut	Resistance welded, SW 13
Locking screw	Flat head screw with combination recessed head
Sound insulation insert	Material: SBR/EPDM; chlorine-free; silicone-free
Sound insulation	According to DIN 4109
Temperature range	-40° to +110 °C
Hardness	45 ± 5° Shore A
Fire behavior	DIN 4102: class B2

DESCRIPTION

- Hinged pipe clamp with patented rapid locking and readjusting mechanism.

Advantages / Benefits

- Compact design for close installation and easy pipe insulation.
- Time and energy saving insertion of the pipe in overhead installation.
- Quick locking for fast installation with one hand.

ADVANTAGES AT A GLANCE

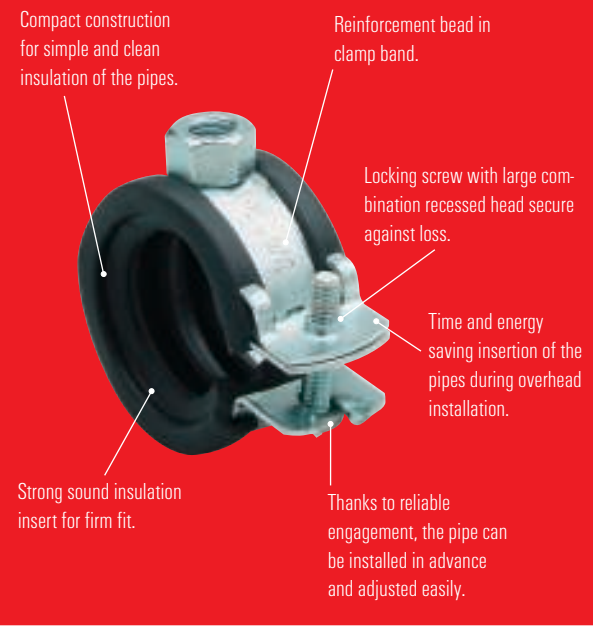

INSTALLATION

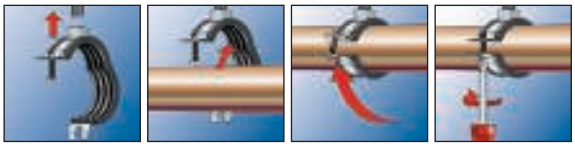

TECHNICAL DATA

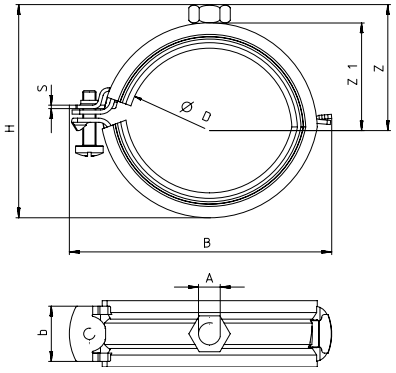

FGRS Plus

Type	Art. No.	Qty. per box	Max. recom. static load (centr. tension) $N_{recom.}$	Size	Clamping range D	Locking screw	Thread A	Connecting nut height	Width x thickness clamp band b x s	Width B	Height H	Height Z	Height Z1
		pcs.	[kN]	[inch]	[mm]			[mm]	[mm]	[mm]	[mm]	[mm]	[mm]
FGRS Plus 12 - 15	**079400**	100	0.65	1/4"	12 - 15	M 5 x 25	M 8	6.8	20 x 1.25	48	35	21	14
FGRS Plus 15 - 19	**079401**	100	0.65	3/8"	15 - 19	M 5 x 25	M 8	6.8	20 x 1.25	52	40	24	17
FGRS Plus 20 - 24	**079402**	100	0.65	1/2"	20 - 24	M 5 x 25	M 8	6.8	20 x 1.25	58	45	26	19
FGRS Plus 25 - 30	**079403**	100	0.65	3/4"	25 - 30	M 5 x 25	M 8	6.8	20 x 1.25	63	49	28	21
FGRS Plus 32 - 37	**079404**	100	0.65	1"	32 - 37	M 5 x 25	M 8	6.8	20 x 1.25	72	57	32	25
FGRS Plus 40 - 45	**079405**	50	0.90	1 1/4"	40 - 45	M 5 x 30	M 8	6.8	20 x 1.5	79	66	37	30
FGRS Plus 48 - 53	**079406**	50	0.90	1 1/2"	48 - 53	M 5 x 30	M 8	6.8	20 x 1.5	88	76	42	35
FGRS Plus 54 - 58	**079407**	50	0.90	-	54 - 58	M 5 x 30	M 8	6.8	20 x 1.5	94	82	45	38
FGRS Plus 59 - 63	**079408**	50	0.90	2"	59 - 63	M 5 x 30	M 8	6.8	20 x 1.5	99	85	46	39

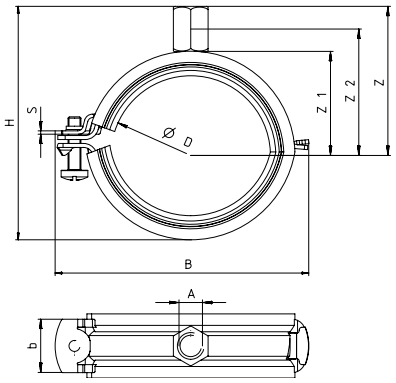

FGRS Plus M8/M10

Type	Art. No.	Qty. per box	Max. recom. static load (centr. tension) $N_{recom.}$	Size	Clamping range D	Locking screw	Thread A	Connecting nut height	Width x thickness clamp band b x s	Width B	Height H	Height Z	Height Z1	Height Z2
		pcs.	[kN]	[inch]	[mm]			[mm]	[mm]	[mm]	[mm]	[mm]	[mm]	[mm]
FGRS Plus 12 - 15 M8/M10	**079430**	100	0.65	1/4"	12 - 15	M 5 x 25	M 8 / M 10	17	20 x 1.25	48	46	31	14	24
FGRS Plus 15 - 19 M8/M10	**079431**	100	0.65	3/8"	15 - 19	M 5 x 25	M 8 / M 10	17	20 x 1.25	52	51	34	17	27
FGRS Plus 20 - 24 M8/M10	**079432**	100	0.65	1/2"	20 - 24	M 5 x 25	M 8 / M 10	17	20 x 1.25	58	56	36	19	29
FGRS Plus 25 - 30 M8/M10	**079433**	100	0.65	3/4"	25 - 30	M 5 x 25	M 8 / M 10	17	20 x 1.25	63	60	38	21	31
FGRS Plus 32 - 37 M8/M10	**079434**	100	0.65	1"	32 - 37	M 5 x 25	M 8 / M 10	17	20 x 1.25	72	68	42	25	35
FGRS Plus 40 - 45 M8/M10	**079435**	50	0.90	1 1/4"	40 - 45	M 5 x 30	M 8 / M 10	17	20 x 1.5	79	76	47	30	40
FGRS Plus 48 - 53 M8/M10	**079436**	50	0.90	1 1/2"	48 - 53	M 5 x 30	M 8 / M 10	17	20 x 1.5	88	86	52	35	45
FGRS Plus 54 - 58 M8/M10	**079437**	50	0.90	-	54 - 58	M 5 x 30	M 8 / M 10	17	20 x 1.5	94	92	55	38	48
FGRS Plus 59 - 63 M8/M10	**079438**	50	0.90	2"	59 - 63	M 5 x 30	M 8 / M 10	17	20 x 1.5	99	95	56	39	49

Hinged pipe clamp FGRS

OVERVIEW

FGRS

Properties:

Material	Steel DD11 (material no. 1.0332) acc. to DIN EN 10111
Zinc plating	Electro zinc plated, 5 - 9 µm
Connecting nut	Resistance welded, M8, SW 13
Locking screw	Flat head screw with combination recessed head
Sound insulation insert	Material: EPDM; chlorine-free; silicone-free
Sound insulation	for DIN 4109
Temperature range	-40° to +100 °C
Hardness	55 ± 5° Shore
Fire behavior	DIN 4102: class B2

DESCRIPTION

- Hinged pipe clamp for quick connection.

Advantages / Benefits

- Time saving insertion of the pipes in overhead installation.
- Compact construction for simple insulation of the pipes.
- Locking screw with large combination recessed slot secures against loss.

INSTALLATION

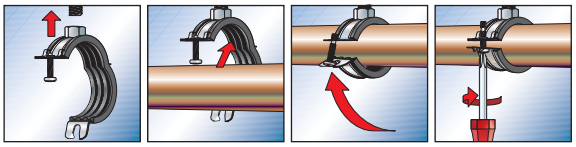

TECHNICAL DATA

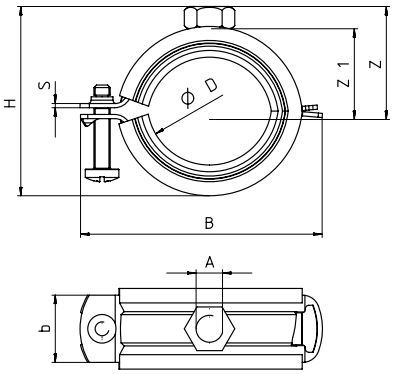

FGRS

Type	Art. No.	Qty. per box	Max. recom. static load (centr. tension) $N_{recom.}$	Size	Clamping range D	Locking screw	Thread A	Connecting nut height	Width x thickness clamp band b x s	Width B	Height H	Heigh Z	Height Z1
		pcs.	[kN]	[inch]	[mm]			[mm]	[mm]	[mm]	[mm]	[mm]	[mm]
FGRS 12 - 14	**079420**	100	0.8	1/4"	12 - 14	M 5 x 25	M 8	8.0	20 x 1.25	48	31	21	14
FGRS 15 - 19	**079421**	100	0.8	3/8"	15 - 19	M 5 x 25	M 8	8.0	20 x 1.25	52	36	24	17
FGRS 20 - 24	**079422**	100	0.8	1/2"	20 - 24	M 5 x 25	M 8	8.0	20 x 1.25	58	41	26	19
FGRS 25 - 30	**079423**	100	0.8	3/4"	25 - 30	M 5 x 25	M 8	8.0	20 x 1.25	63	47	28	21
FGRS 32 - 37	**079424**	100	0.9	1"	32 - 37	M 5 x 25	M 8	8.0	20 x 1.25	72	54	32	25
FGRS 40 - 44	**079425**	50	0.9	1 1/4"	40 - 44	M 5 x 35	M 8	8.0	20 x 1.5	79	61	37	30
FGRS 45 - 50	**079426**	50	0.9	1 1/2"	45 - 50	M 5 x 35	M 8	8.0	20 x 1.5	88	67	42	35
FGRS 50 - 55	**079427**	50	0.9	-	50 - 55	M 5 x 35	M 8	8.0	20 x 1.5	94	72	45	38
FGRS 56 - 63	**079428**	50	0.9	2"	56 - 63	M 5 x 35	M 8	8.0	20 x 1.5	99	80	46	39

Plastic hinged pipe clamp FKS Plus

OVERVIEW

FKS Plus

Properties:

Material	Steel DD11 (material no. 1.0332) acc. to DIN EN 10111
Zinc plating	Electro zinc plated, 5 - 9 µm
Connecting nut	Resistance welded, M 8, SW 13
Locking screw	Flat head screw with combination recessed head
Sound insulation insert	Material: NR/SBR/EPDM
Sound insulation	for DIN 4109
Temperature range	-40° to +110 °C
Hardness	60 ± 5° Shore
Fire behavior	DIN 4102: class B2

DESCRIPTION

- Hinged pipe clamp.
- For plastic and metal composite pipes.

Advantages / Benefits

- Removable spacer sleeve for changeover from sliding to clamping function of the clamp.
- Quick connecting for a fast installation with one hand.
- The pipe can be preinstalled and adjusted simply.
- Time saving insertion of the pipes in overhead installation.
- Compact construction for simple insulation of the pipes.

INSTALLATION

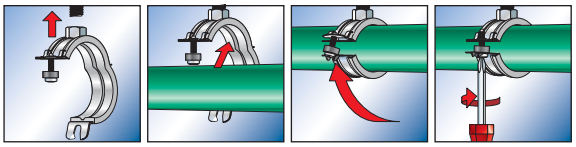

TECHNICAL DATA

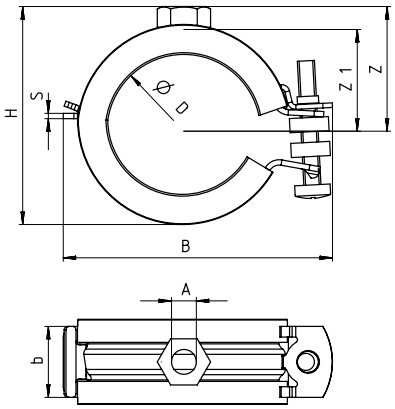

FKS Plus

Type	Art. No.	Qty. per box	Max. recom. static load (centr. tension) $N_{recom.}$	Size	Clamping range D	Locking screw	Thread A	Connecting nut height	Width x thickness clamp band b x s	Width B	Height H	Height Z	Height Z1
		pcs.	[kN]	[inch]	[mm]			[mm]	[mm]	[mm]	[mm]	[mm]	[mm]
FKS Plus 15 - 19	**079470**	100	0.65	3/8"	15 - 19	M 5 x 25	M 8	6.8	20 x 1.25	52	40	24	17
FKS Plus 20 - 24	**079471**	100	0.65	1/2"	20 - 24	M 5 x 25	M 8	6.8	20 x 1.25	58	45	26	19
FKS Plus 25 - 30	**079472**	100	0.65	3/4"	25 - 30	M 5 x 25	M 8	6.8	20 x 1.25	63	49	28	21
FKS Plus 32 - 37	**079473**	100	0.65	1"	32 - 37	M 5 x 25	M 8	6.8	20 x 1.25	72	57	32	25
FKS Plus 40 - 45	**079474**	50	0.90	1 1/4"	40 - 45	M 5 x 30	M 8	6.8	20 x 1.5	79	66	37	30
FKS Plus 48 - 53	**079475**	50	0.90	1 1/2"	48 - 53	M 5 x 30	M 8	6.8	20 x 1.5	88	76	42	35
FKS Plus 54 - 58	**079476**	50	0.90	-	54 - 58	M 5 x 30	M 8	6.8	20 x 1.5	94	82	45	38
FKS Plus 59 - 63	**079477**	50	0.90	2"	59 - 63	M 5 x 30	M 8	6.8	20 x 1.5	99	85	46	39

Pipe clamp FRS Plus

OVERVIEW

FRS Plus

Properties:

Material	Steel DD11 (material no. 1.0332) acc. to DIN EN 10111
Zinc plating	Electro zinc plated, 5 - 9 µm
Connecting nut	Resistance welded, M 8/M 10, SW 13
Locking screw	Flat head screw with combination recessed head
Sound insulation insert	Material: SBR/EPDM; chlorine-free; silicone-free
Sound insulation	for DIN 4109
Temperature range	-40° to +100 °C
Hardness	45 ± 5° Shore
Fire behavior	DIN 4102: class B2

DESCRIPTION

- Two-screw pipe clamp with patented rapid locking and readjusting mechanism.
- Connecting nut with combination thread M8 / M10.

Advantages / Benefits

- Quick-locking permits simple and fast installation.
- Large opening angle for easy insertion of the pipes.
- Because of reliable click mechanism, the pipe can be preinstalled and adjusted easily.
- Time and energy saving insertion of the pipes for overhead installation.

ADVANTAGES AT A GLANCE

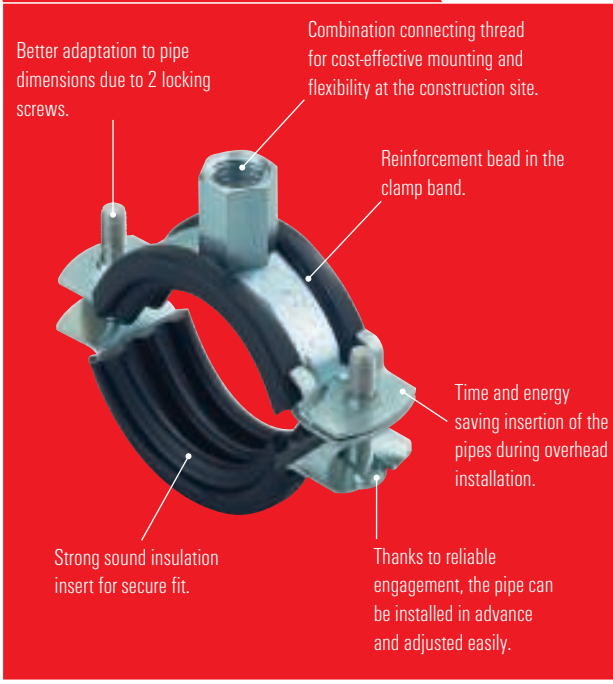

INSTALLATION

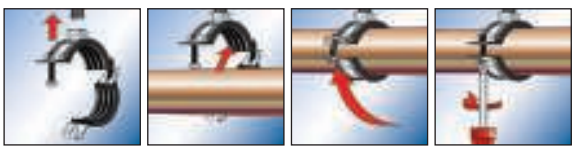

TECHNICAL DATA

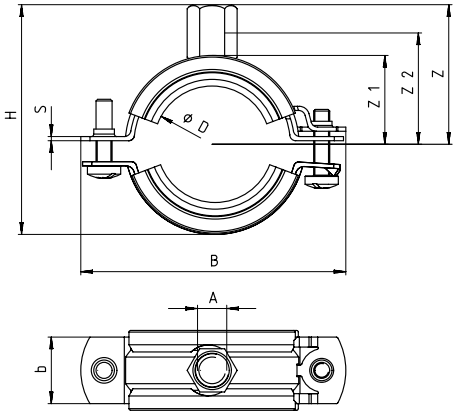

FRS Plus

Type	Art. No.	Qty. per box	Max. recom. static load (centr. tension)	Size	Clamping range	Locking screw	Thread	Connecting nut height	Width x thickness clamp band	Width	Height	Height	Height	Height
			$N_{recom.}$		D		A		b x s	B	H	Z	Z1	Z2
		pcs.	[kN]	[inch]	[mm]			[mm]	[mm]	[mm]	[mm]	[mm]	[mm]	[mm]
FRS Plus 12 - 15	**079440**	100	0.8	1/4"	12 - 15	M 5 x 20	M 8 / M 10	17	20 x 1.25	58	48	32	15	25
FRS Plus 15 - 19	**079441**	100	0.8	3/8"	15 - 19	M 5 x 25	M 8 / M 10	17	20 x 1.25	61	51	34	17	27
FRS Plus 20 - 24	**079442**	100	0.8	1/2"	20 - 24	M 5 x 25	M 8 / M 10	17	20 x 1.25	66	56	36	19	29
FRS Plus 25 - 30	**079443**	100	0.8	3/4"	25 - 30	M 5 x 25	M 8 / M 10	17	20 x 1.25	72	62	39	22	32
FRS Plus 32 - 37	**079444**	100	0.8	1"	32 - 37	M 5 x 25	M 8 / M 10	17	20 x 1.25	79	67	42	25	35
FRS Plus 40 - 45	**079445**	50	0.8	1 1/4"	40 - 45	M 5 x 30	M 8 / M 10	17	20 x 1.5	86	78	48	31	41
FRS Plus 48 - 53	**079446**	50	0.8	1 1/2"	48 - 53	M 5 x 30	M 8 / M 10	17	20 x 1.5	94	83	50	33	43
FRS Plus 54 - 58	**079447**	50	0.8	-	54 - 58	M 5 x 30	M 8 / M 10	17	20 x 1.5	101	89	53	36	46
FRS Plus 59 - 63	**079448**	50	1.5	2"	59 - 63	M 6 x 30	M 8 / M 10	17	25 x 2.0	114	96	57	40	50
FRS Plus 62 - 64	**079449**	25	1.5	-	62 - 64	M 6 x 30	M 8 / M 10	17	25 x 2.0	114	96	57	40	50
FRS Plus 68 - 73	**079450**	25	1.5	-	68 - 73	M 6 x 30	M 8 / M 10	17	25 x 2.0	124	108	63	46	56
FRS Plus 74 - 78	**079451**	25	1.5	2 1/2"	74 - 78	M 6 x 30	M 8 / M 10	17	25 x 2.0	129	113	65	48	58
FRS Plus 80 - 86	**079452**	25	1.5	-	80 - 86	M 6 x 30	M 8 / M 10	17	25 x 2.0	133	115	66	49	59
FRS Plus 87 - 92	**079453**	25	1.5	3"	87 - 92	M 6 x 30	M 8 / M 10	17	25 x 2.0	142	125	71	54	64
FRS Plus 95 - 103	**079454**	25	1.5	-	95 - 103	M 6 x 30	M 8 / M 10	17	25 x 2.0	156	140	79	62	72
FRS Plus 108 - 116	**079455**	20	1.5	4"	108 - 116	M 6 x 35	M 8 / M 10	17	25 x 2.0	169	154	86	69	79

Pipe clamp FRS

OVERVIEW

FRS

Properties:

Material	Steel DD11 (material no. 1.0332) acc. to DIN EN 10111
Zinc plating	Electro zinc plated, 5 - 9 µm
Connecting nut	Resistance welded, M 8/M 10, SW 13
Locking screw	Flat head screw with combination recessed head
Sound insulation insert	Material: SBR/EPDM; chlorine-free; silicone-free
Sound insulation	acc.to DIN 4109
Temperature range	-40° to +110°C
Hardness	60 ± 5° Shore
Fire behavior	DIN 4102: class B2

DESCRIPTION

- Two-screw pipe clamp with rubber inlay.
- Connecting nut with combination thread M8 / M10.

Advantages / Benefits

- Simple installation due to large opening angle.
- Locking screw secured against loss.
- Combination connecting thread for cost-effective warehousing and flexibility at the construction site.

INSTALLATION

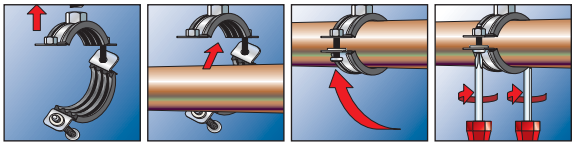

TECHNICAL DATA

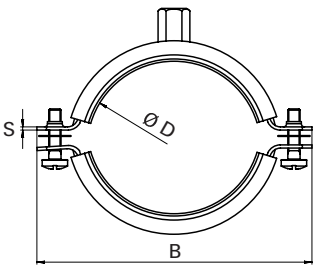

FRS
Combination thread M8 / M10

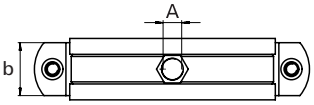

Type	Art. No.	Qty. per box	Max. recom. static load (centr. tension)	Size	Clamping range	Locking screw	Thread	Connecting nut height	Width x thickness clamp band	Width
		pcs.	$N_{recom.}$ [kN]	[inch]	D [mm]		A	[mm]	b x s [mm]	B [mm]
FRS 12-15 M8/M10	**510969**	100	1.0	1/4"	12 - 15	M6 x 20	M8/M10	15	20 x 1.25	55
FRS 15-19 M8/M10	**42535**	100	1.0	3/8"	15 - 19	M6 x 16	M8/M10	15	20 x 1.25	59
FRS 20-24 M8/M10	**42536**	100	1.0	1/2"	20 - 24	M6 x 16	M8/M10	15	20 x 1.25	65
FRS 25-30 M8/M10	**42537**	100	1.0	3/4"	25 - 30	M6 x 16	M8/M10	15	20 x 1.25	72
FRS 32-37 M8/M10	**42538**	100	1.0	1"	32 - 37	M6 x 20	M8/M10	15	20 x 1.25	77
FRS 40-45 M8/M10	**42554**	50	1.0	1 1/4"	40 - 45	M6 x 16	M8/M10	15	20 x 1.25	89
FRS 48-54 M8/M10	**510970**	50	1.0	1 1/2"	48 - 54	M6 x 16	M8/M10	15	20 x 1.25	99
FRS 55-61 M8/M10	**42555**	50	1.0	2"	55 - 61	M6 x 20	M8/M10	15	20 x 1.25	105
FRS 63-67 M8/M10	**91488**	50	1.0	-	63 - 67	M6 x 16	M8/M10	15	20 x 1.25	111
FRS 72-80 M8/M10	**91489**	25	1.5	2 1/2"	72 - 80	M6 x 20	M8/M10	15	20 x 2.00	125
FRS 87-92 M8/M10	**91505**	25	1.5	3"	87 - 92	M6 x 30	M8/M10	15	20 x 2.00	137
FRS 108-116 M8/M10	**91506**	20	2.0	4"	108 - 116	M6 x 30	M8/M10	15	25 x 2.00	164
FRS 121-128 M8/M10	**79456**	10	2.5	-	121 - 128	M6 x 30	M8/M10	15	25 x 2.50	176
FRS 133-141 M8/M10	**79457**	10	2.5	5"	133 - 141	M6 x 30	M8/M10	15	25 x 2.50	187
FRS 159-165 M8/M10	**79458**	8	2.5	-	159 - 165	M6 x 30	M8/M10	15	25 x 2.50	211
FRS 165-168 M8/M10	**79459**	8	2.5	6"	165 - 168	M6 x 30	M8/M10	15	25 x 2.50	225

Silicone pipe clamp FRSH

OVERVIEW

FRSH

Properties:

Material	Steel DD11 (material no. 1.0332) acc. to DIN EN 10111
Zinc plating	Electro zinc plated, 5 - 9 µm
Connecting nut (up to FRSH 59 - 63)	Resistance welded, M 8, SW 13
Locking screw	Flat head screw with combination recessed head
Sound insulation insert	Material: silicone
Sound insulation	for DIN 4109
Temperature range	-50° to +220°C
Hardness	60 ± 5° Shore A
Fire behavior	DIN 4102: class B2

DESCRIPTION

- Two-screw pipe clamp with high temperature resistant sound insulation insert.

Advantages / Benefits

- Use for steam up to max. +220 °C.
- Simple installation due to large opening angle.
- Locking screw secured against loss.

INSTALLATION

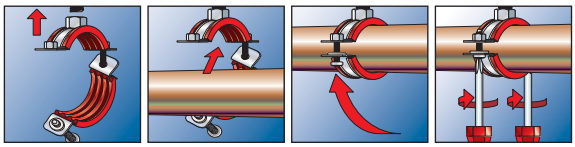

TECHNICAL DATA

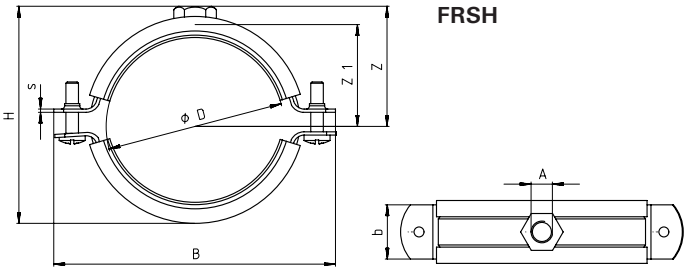

Type	Art. No.	Qty. per box	Max. recom. static load (centr. tension)	Size	Clamping range	Locking screw	Thread	Connecting nut height	Width x thickness clamp band	Width	Height	Height	Height
			$N_{recom.}$		D		A		b x s	B	H	Z	Z1
		pcs.	[kN]	[inch]	[mm]			[mm]	[mm]	[mm]	[mm]	[mm]	[mm]
FRSH 15 - 19	**063490**	100	1.00	3/8"	15 - 19	M 5 x 20	M 8	6.8	20 x 1.25	62	38	23	16
FRSH 20 - 24	**063492**	100	1.00	1/2"	20 - 24	M 5 x 20	M 8	6.8	20 x 1.25	68	44	26	19
FRSH 25 - 30	**063494**	100	1.00	3/4"	25 - 30	M 5 x 20	M 8	6.8	20 x 1.25	75	50	29	22
FRSH 32 - 37	**063495**	100	1.00	1"	32 - 37	M 5 x 20	M 8	6.8	20 x 1.25	80	56	32	25
FRSH 40 - 45	**063498**	50	1.00	1 1/4"	40 - 45	M 5 x 20	M 8	6.8	20 x 1.25	90	64	36	29
FRSH 48 - 53	**063499**	50	1.00	1 1/2"	48 - 53	M 5 x 20	M 8	6.8	20 x 1.25	97	74	41	34
FRSH 54 - 59	**063500**	50	1.00	-	54 - 59	M 5 x 20	M 8	6.8	20 x 1.25	104	83	45	38
FRSH 60 - 64	**063502**	50	1.00	2"	60 - 64	M 5 x 20	M 8	6.8	20 x 1.25	110	89	48	41
FRSH 68 - 73	**063504**	25	1.30	-	68 - 73	M 6 x 25	M 10	8.4	25 x 1.5	124	98	51	43
FRSH 72 - 78	**063505**	25	1.30	2 1/2"	72 - 78	M 6 x 30	M 10	8.4	25 x 1.5	129	103	56	48
FRSH 80 - 86	**063511**	25	1.30	-	80 - 86	M 6 x 30	M 10	8.4	25 x 1.5	133	110	58	50
FRSH 87 - 92	**063513**	25	1.30	3"	87 - 92	M 6 x 25	M 10	8.4	25 x 1.5	142	112	60	52
FRSH 95 - 103	**063518**	25	1.30	-	95 - 103	M 6 x 25	M 10	8.4	25 x 1.5	156	120	68	60
FRSH 102 - 116	**063520**	20	2.00	4"	102 - 116	M 6 x 30	M 10	8.4	25 x 2.0	172	142	75	67
FRSH 121 - 127	**063525**	10	2.00	-	121 - 127	M 8 x 30	M 8 / M 10	21	25 x 2.5	192	175	85	77
FRSH 133 - 141	**063537**	10	2.00	5"	133 - 141	M 8 x 35	M 8 / M 10	21	25 x 2.5	198	180	88	80
FRSH 159 - 162	**091507**	8	2.00	-	159 - 162	M 8 x 30	M 8 / M 10	21	25 x 2.5	218	206	101	93
FRSH 165 - 168	**091508**	8	2.00	6"	165 - 168	M 8 x 35	M 8 / M 10	21	25 x 2.5	226	212	104	96

Pipe clamp FRSN

OVERVIEW

FRSN

Properties:

Material	Steel DD11 (material no. 1.0332) acc. to DIN EN 10111
Zinc plating	Electro zinc plated, 5 - 9 µm
Connecting nut	Resistance welded, M 8/M 10, SW 13, M 10/M 12, SW 17
Locking screw	Flat head screw with combination recessed head

DESCRIPTION

- Two-screw pipe clamp without rubber insert.
- Connecting nut with combination thread M8/M10 or M10/M12.

Advantages / Benefits

- Simple installation due to large opening angle.
- Compact construction for simple and clean insulation of the pipes.
- Locking screw secured against loss.

INSTALLATION

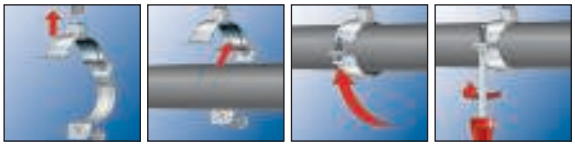

TECHNICAL DATA

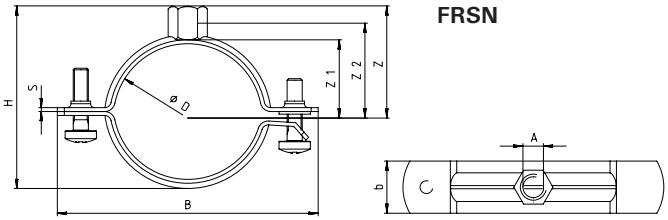

FRSN

Type	Art. No.	Qty. per box	Max. recom. static load (centr. tension)	Size	Clamping range	Locking screw	Thread	Connecting nut height	Width x thickness clamp band	Width	Height	Height	Height	Height
			$N_{recom.}$		D		A		b x s	B	H	Z	Z1	Z2
		pcs.	[kN]	[inch]	[mm]			[mm]	[mm]	[mm]	[mm]	[mm]	[mm]	[mm]
FRSN 15 - 19 M8/M10	**049459**	100	1.50	3/8"	15 - 19	M 6 x 16	M 8 / M 10	15	20 x 1.5	56	30	23	6	15
FRSN 21 - 23 M8/M10	**049789**	100	1.50	1/2"	21 - 23	M 6 x 16	M 8 / M 10	15	20 x 1.5	60	36	25	9	17
FRSN 25 - 28 M8/M10	**049790**	100	1.50	3/4"	25 - 28	M 6 x 16	M 8 / M 10	15	20 x 1.5	67	40	27	11	19
FRSN 32 - 36 M8/M10	**049793**	100	1.50	1"	32 - 36	M 6 x 16	M 8 / M 10	15	20 x 1.5	73	47	29	15	22
FRSN 38 - 43 M8/M10	**049794**	50	1.50	1 1/4"	38 - 43	M 6 x 16	M 8 / M 10	15	20 x 1.5	79	53	34	18	27
FRSN 44 - 49 M8/M10	**049902**	50	1.50	1 1/2"	44 - 49	M 6 x 16	M 8 / M 10	15	20 x 1.5	88	59	36	21	29
FRSN 50 - 56 M8/M10	**049922**	50	1.50	-	50 - 56	M 6 x 16	M 8 / M 10	15	20 x 1.5	92	65	38	23	31
FRSN 57 - 61 M8/M10	**049944**	50	1.50	2"	57 - 61	M 6 x 16	M 8 / M 10	15	20 x 1.5	98	72	43	27	35
FRSN 63 - 70 M8/M10	**049945**	50	1.50	-	63 - 70	M 6 x 16	M 8 / M 10	15	20 x 1.5	105	78	46	30	39
FRSN 70 - 77 M8/M10	**049947**	25	1.50	2 1/2"	70 - 77	M 6 x 16	M 8 / M 10	15	20 x 1.5	112	85	49	34	42
FRSN 80 - 83 M8/M10	**049948**	25	1.50	-	80 - 83	M 6 x 16	M 8 / M 10	15	20 x 1.5	115	95	53	39	45
FRSN 83 - 91 M8/M10	**049979**	25	2.50	3"	83 - 91	M6 x 20	M 8 / M 10	15	20 x 2.0	127	98	55	40	48
FRSN 93 - 99 M8/M10	**050005**	25	2.50	-	93 - 99	M6 x 20	M 8 / M 10	15	20 x 2.0	136	108	59	45	52
FRSN 100 - 106 M8/M10	**050006**	25	2.50	-	100 - 106	M6 x 20	M 8 / M 10	15	20 x 2.0	144	115	64	49	56
FRSN 108 - 114 M8/M10	**050008**	25	2.50	4"	108 - 114	M6 x 20	M 8 / M 10	15	20 x 2.0	156	123	67	53	60
FRSN 118 - 122 M8/M10	**500744**	25	2.50	-	118 - 122	M6 x 20	M 8 / M 10	15	20 x 2.0	160	133	75	58	68
FRSN 123 - 128 M8/M10	**050009**	25	2.50	-	123 - 128	M 6 x 30	M 8 / M 10	15	25 x 2.5	165	138	79	60	72
FRSN 131 - 136 M8/M10	**050010**	25	2.50	-	131 - 136	M 6 x 30	M 8 / M 10	15	25 x 2.5	175	146	82	64	75
FRSN 137 - 146 M8/M10	**050023**	25	2.50	5"	137 - 146	M 6 x 30	M 8 / M 10	15	25 x 2.5	180	152	82	67	75
FRSN 146 - 156 M8/M10	**500746**	25	2.50	-	146 - 156	M6 x 30	M 8 / M 10	15	25 x 2.5	194	169	93	78	82
FRSN 159 - 165 M10/M12	**500747**	25	2.50	6"	159 - 165	M 6 x 30	M 10 / M 12	20	25 x 2.5	203	181	102	82	91
FRSN 166 - 175 M10/M12	**500748**	20	2.50	-	166 - 175	M 8 x 30	M 10 / M 12	20	25 x 2.5	211	181	97	82	89
FRSN 176 - 179 M10/M12	**500749**	15	2.50	-	176 - 179	M 8 x 30	M 10 / M 12	20	25 x 2.5	221	191	102	87	94
FRSN 185 - 191 M10/M12	**500750**	15	2.50	-	185 - 191	M 8 x 30	M 10 / M 12	20	25 x 2.5	233	200	106	91	99
FRSN 200 - 206 M10/M12	**500751**	10	2.50	-	200 - 206	M 8 x 30	M 10 / M 12	20	25 x 2.5	248	215	114	99	106
FRSN 210 - 219 M10/M12	**500752**	10	2.50	8"	210 - 219	M 8 x 40	M 10 / M 12	20	25 x 2.5	261	225	119	104	111

Heavy duty pipe clamp FRS-F

OVERVIEW

FRS-F

Properties:

Material	Steel DD11 (material no. 1.0332) acc. to DIN EN 10111
Zinc plating	Electro zinc plated, 5 - 9 µm
Connecting nut	Resistance welded M10, SW 17; M12, SW 19
Locking screw	Flat head screw with combination recessed head
Sound insulation insert	Material: SBR/EPDM; chlorine-free; silicone-free
Temperature range	-50° to +110 °C
Hardness	45 ± 5° Shore A
Fire behavior	DIN 4102: class B2

Fire resistance classification
F 120
Pipe clamp type see test report

DESCRIPTION

- Massive clamp with sound insulation insert for medium to high load range.
- Pipe clamp FRS-F with test report by fire exposure related to DIN 4102-2.

Advantages/Benefits

- Simple installation due to large opening angle.
- Locking screw secured against lost.

INSTALLATION

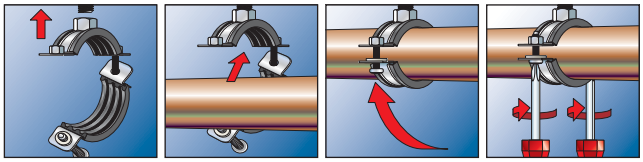

TECHNICAL DATA

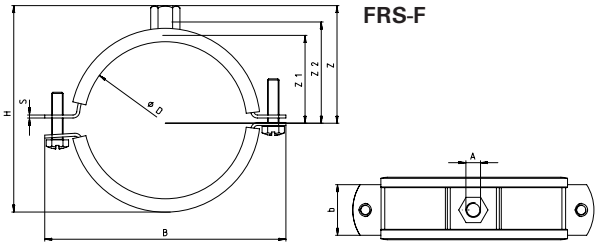

FRS-F

Type	Art. No.	Qty. per box	Max. recom. static load (centr. tension)	Size	Clamping range D	Locking screw	Thread A	Connecting nut height	Width x thickness clamp band b x s	Width B	Height H
		pcs.	[kN]	[inch]	[mm]			[mm]	[mm]	[mm]	[mm]
FRS-F 3/8"	**512897**	25	1.5	3/8"	14 - 20	M6 x 20	M10	14	20 x 1.5	63.5	50
FRS-F 1/2"	**512940**	25	1.5	1/2"	20 - 26	M6 x 20	M10	14	20 x 1.5	69.5	56
FRS-F 3/4"	**512942**	25	1.5	3/4"	26 - 30	M6 x 20	M10	14	20 x 1.5	75	61
FRS-F 1"	**512943**	25	1.5	1"	32 - 38	M6 x 20	M10	14	20 x 1.5	79.5	67
FRS-F 1 1/4"	**512944**	25	1.5	1 1/4"	40 - 46	M6 x 25	M10	14	20 x 1.5	91.5	79
FRS-F 1 1/2"	**512945**	25	1.5	1 1/2"	48 - 54	M6 x 20	M10	14	20 x 1.5	98	84
FRS-F 57 mm	**512946**	25	1.5	57 mm	54 - 60	M6 x 25	M10	14	20 x 1.5	104.5	91
FRS-F 2"	**512947**	25	1.5	2"	60 - 66	M6 x 25	M10	14	20 x 1.5	110.5	97
FRS-F 70 mm	**512948**	10	3.15	70 mm	68 - 73	M6 x 20	M10	14	25 x 2.0	121	106
FRS-F 2 1/2"	**512949**	10	3.15	2 1/2"	72 - 80	M6 x 25	M10	14	25 x 2.0	124.5	110
FRS-F 83 mm	**512950**	10	3.15	83 mm	82 - 86	M8 x 25	M10	14	25 x 2.0	139.5	121
FRS-F 3"	**512951**	10	3.15	3"	88 - 92	M8 x 25	M10	14	25 x 2.0	144	125
FRS-F 102 mm	**512952**	10	3.15	102 mm	99 - 103	M8 x 25	M10	14	25 x 2.5	162	140
FRS-F 110 mm	**512955**	10	3.15	110 mm	108 - 112	M8 x 25	M10	14	25 x 2.5	174.5	150
FRS-F 4"	**512965**	10	3.15	4"	112 - 118	M8 x 30	M12	16	25 x 2.5	176	152
FRS-F 125 mm	**512966**	10	3.15	125 mm	125 - 130	M8 x 30	M12	16	25 x 2.5	185.5	166
FRS-F 133 mm	**512967**	10	3.15	133 mm	133 - 137	M8 x 30	M12	16	25 x 2.5	195	174
FRS-F 5"	**512968**	10	3.15	5"	137 - 142	M8 x 30	M12	16	25 x 2.5	201	180
FRS-F 160 mm	**512969**	10	3.15	160 mm	159 - 164	M8 x 30	M12	16	25 x 2.5	219	198
FRS-F 6"	**512970**	10	3.15	6"	164 - 169	M8 x 30	M12	16	25 x 2.5	225.5	205

Heavy duty pipe clamp FRSM

OVERVIEW

FRSM

Properties:

Material	Steel DD11 (material no. 1.0332) acc. to DIN EN 10111
Zinc plating	Electro zinc plated, 5 - 9 µm
Connecting nut	Resistance welded
Locking screw	Flat head screw with combination recessed head
Sound insulation insert	Material: SBR/EPDM; chlorine-free; silicone-free
Sound insulation	for DIN 4109
Temperature range	-50° to +110°C
Hardness	45 ± 5° Shore A
Fire behavior	DIN 4102: class B2

DESCRIPTION

- Massive clamp with sound insulation insert for medium to high load range.
- Inch connecting nut with thread ½".

Advantages/Benefits

- Locking screw with large combination recessed slot and secured against lost.

INSTALLATION

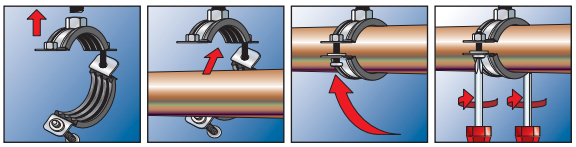

TECHNICAL DATA

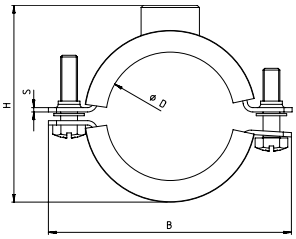

FRSM

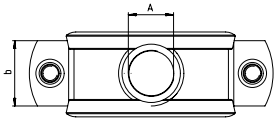

Type	Art. No.		Qty. per box	Max. recom. static load (centr. tension)	Size	Clamping range D	Locking screw	Thread A	Connecting nut height	Width x thickness clamp band	Width	Height
			pcs.	[kN]	[inch]	[mm]			[mm]	b x s [mm]	B [mm]	H [mm]
FRSM 3/8"	**512839**		25	1.5	3/8"	14 - 20	M6 x 20	1/2"	15	20 x 1.5	63.5	51
FRSM 1/2"	**512840**		25	1.5	1/2"	20 - 26	M6 x 20	1/2"	15	20 x 1.5	69.5	57
FRSM 3/4"	**512848**		25	1.5	3/4"	26 - 30	M6 x 20	1/2"	15	20 x 1.5	75	62
FRSM 1"	**512866**		25	1.5	1"	32 - 38	M6 x 20	1/2"	15	20 x 1.5	79.5	68
FRSM 1 1/4"	**512878**		25	1.5	1 1/4"	40 - 46	M6 x 20	1/2"	15	20 x 1.5	91.5	80
FRSM 1 1/2"	**512879**		25	1.5	1 1/2"	48 - 54	M6 x 20	1/2"	15	20 x 1.5	98	85
FRSM 2"	**512881**		25	1.5	2"	60 - 66	M6 x 25	1/2"	15	20 x 1.5	110.5	98
FRSM 2 1/2"	**512882**		10	1.5	2 1/2"	72 - 80	M6 x 25	1/2"	17	25 x 2.0	124.5	111
FRSM 3"	**512884**		10	3.15	3"	88 - 92	M8 x 25	1/2"	17	25 x 2.0	144	125
FRSM 110 mm	**512886**		10	3.15	110 mm	108 - 112	M8 x 25	1/2"	15.5	25 x 2.5	174.5	151
FRSM 4"	**512888**		10	3.15	4"	112 - 118	M8 x 30	1/2"	18	25 x 2.5	176	156
FRSM 133 mm	**512890**		10	3.15	133 mm	133 - 137	M8 x 30	1/2"	15.5	25 x 2.5	195	173
FRSM 5"	**512891**		10	3.15	5"	137 - 142	M8 x 30	1/2"	15.5	25 x 2.5	201	179
FRSM 160 mm	**512892**		10	3.15	160 mm	159 - 164	M8 x 30	1/2"	15.5	25 x 2.5	219	197
FRSM 6"	**512896**		10	3.15	6"	164 - 169	M8 x 30	1/2"	15.5	25 x 2.5	225.5	204

Heavy duty pipe clamp FRSM M10 / M12 / M16

OVERVIEW

FRSM M10 / M12 / M16

Properties:

Material	Steel DD11 (material no. 1.0332) acc. to DIN EN 10111
Zinc plating	Electro zinc plated, 5 - 9 µm
Connecting nut	M10/M12 = SW 17, M12/M16 = SW 22, M16 = SW 24
Locking screw	Flat head screw with combination recessed head
Sound insulation insert	Material: sEPDM ; chlorine-free; silicone-free
Temperature range	-50° to +110°C
Hardness	45 ± 5° Shore A
Fire behavior	DIN 4102: class B2

DESCRIPTION

- Massive clamp with sound insulation insert for medium to high load range.
- Connecting nut with combinations thread M10/M12, M12/M16 or M16.

Advantages / Benefits

- Simple installation due to large opening angle.
- Locking screw secured against loss.
- From 124 mm diameter installation with two threaded rods on sides is possible.

INSTALLATION

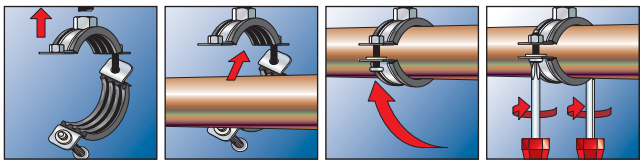

Standard installation

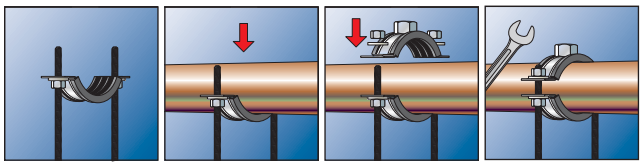

From 124 mm diameter, installation with two rods on side is possible

TECHNICAL DATA

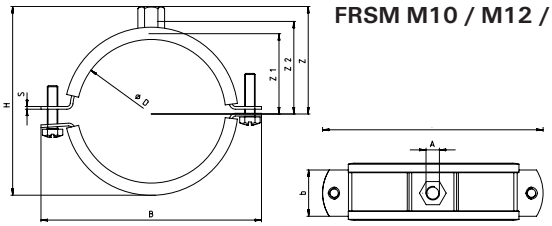

FRSM M10 / M12 / M16

Type	Art. No.	Qty. per box	Max. recom. static load (centr. tension)	Size	Clamping range	Locking screws	Thread	Connecting nut height	Width x thickness clamp band	Width	Height	Height	Height	Height
			$N_{recom.}$	D			A		b x s	B	H	Z	Z1	Z2
		pcs.	[kN]	[inch]	[mm]			[mm]	[mm]	[mm]	[mm]	[mm]	[mm]	[mm]
FRSM 1/2" M10/M12	**504589**	50	2.5	1/2"	19 - 23	M6	M10 / M12	20	25 x 2.5	76	47	38	18	26.5
FRSM 3/4" M10/M12	**504590**	50	2.5	3/4"	24 - 29	M6	M10 / M12	20	25 x 2.5	82	53	41	21	29.5
FRSM 1" M10/M12	**504591**	50	2.5	1"	33 - 36	M6	M10 / M12	20	25 x 2.5	89	60	44.5	24.5	33
FRSM 1 1/4" M10/M12	**504592**	20	2.5	1 1/4"	40 - 45	M6	M10 / M12	20	25 x 2.5	98	69	49	29	37.5
FRSM 1 1/2" M10/M12	**093700**	20	2.5	1 1/2"	47 - 52	M6	M10 / M12	20	25 x 2.5	105	76	52.5	32.5	41
FRSM 53 - 58 M10/M12	**093701**	20	2.5	-	53 - 58	M6	M10 / M12	20	25 x 2.5	111	82	55.5	35.5	44
FRSM 2" M10/M12	**093702**	20	2.5	2"	60 - 65	M6	M10 / M12	20	25 x 2.5	118	89	59	39	47.5
FRSM 2 1/2" M10/M12	**093703**	20	3.0	2 1/2"	73 - 78	M8	M10 / M12	20	30 x 3.0	136	105	68.5	48.5	57
FRSM 79- 85 M10/M12	**504593**	20	3.0	-	79 - 85	M8	M10 / M12	20	30 x 3.0	144	112	72	52	60.5
FRSM 3" M10/M12	**093704**	20	3.0	3"	88 - 93	M8	M10 / M12	20	30 x 3.0	152	120	76	56	64.5
FRSM 102 M10/M12	**093705**	20	3.0	-	100 - 106	M8	M10 / M12	20	30 x 3.0	166	133	82.5	62.5	71
FRSM 4" M10/M12	**093707**	20	3.0	4"	108 - 116	M8	M10 / M12	20	30 x 3.0	175	143	87.5	67.5	76
FRSM 124 - 129 M10/M12	**093709**	20	3.0	-	124 - 129	M8*	M10 / M12	20	30 x 3.0	194	154	94	74	82.5
FRSM 133 M10/M12	**093710**	20	3.0	-	131 - 137	M8*	M10 / M12	20	30 x 3.0	202	162	98	78	86.5
FRSM 5" M10/M12	**093711**	20	3.0	5"	138 - 145	M8*	M10 / M12	20	30 x 3.0	210	170	102	82	90.5
FRSM 160 M10/M12	**093712**	20	3.0	-	156 - 162	M8*	M10 / M12	20	30 x 3.0	227	187	111	90.5	99
FRSM 6" M10/M12	**093713**	20	3.0	6"	165 - 171	M8*	M10 / M12	20	30 x 3.0	255	193	115	95	103.5
FRSM 7" M10/M12	**093714**	10	3.0	7"	188 - 194	M8*	M10 / M12	20	30 x 3.0	278	216	127	107	115.5
FRSM 200 M10/M12	**093715**	10	3.0	-	196 - 203	M8*	M10 / M12	20	30 x 3.0	287	225	131	111	119.5
FRSM 212 M12/M16	**505453**	10	6.0	-	205 - 214	M12*	M12 / M16	30	40 x 4.0	289	244	149	119	127.5
FRSM 8" M12/M16	**505454**	10	6.0	8"	219 - 225	M12*	M12 / M16	30	40 x 4.0	300	255	154	124	132.5
FRSM 250 M12/M16	**505455**	10	6.0	-	244 - 250	M12*	M12 / M16	30	40 x 4.0	325	280	167	137	145.5
FRSM 10" M12/M16	**505456**	10	6.0	10"	267 - 273	M12*	M12 / M16	30	40 x 4.0	348	303	178	148	156.5
FRSM 300 M12/M16	**505457**	10	6.0	-	297 - 304	M12*	M12 / M16	30	40 x 4.0	379	334	194	164	172.5
FRSM 12" M12/M16	**505458**	10	6.0	12"	320 - 328	M12*	M12 / M16	30	40 x 4.0	403	358	206	176	184.5
FRSM 348-356 M16	**504594**	1	10.0	-	348 - 356	M16*	M16	24	50 x 5.0	480	394	213	189	-
FRSM 364-372 M16	**504595**	1	10.0	-	364 - 372	M16*	M16	24	50 x 5.0	496	410	221	197	-
FRSM 400-409 M16	**504596**	1	10.0	-	400 - 409	M16*	M16	24	50 x 5.0	533	447	240	216	-
FRSM 454-462 M16	**504597**	1	10.0	-	454 - 462	M16*	M16	24	50 x 5.0	586	500	266	242	-
FRSM 500-508 M16	**504598**	1	10.0	-	500 - 508	M16*	M16	24	50 x 5.0	632	546	289	265	-

* seperate nut on locking screws (installation with two rods on side is possible).

Refrigeration pipe clamp KFT

OVERVIEW

KFT

Properties:

Material	Closed polyurethane system
Diffusion resistance	2500 µ
Density	250 kg/m³
Compressive strength	2.3 N/mm²
Heat conductivity (at 0 °C)	0.049 W/(m*K)
Temperature range	- 160 °C to + 130 °C
Fire behavior	DIN 4102: class B2

DESCRIPTION

- Two-piece refrigerant pipe clamp made from closed PUR-foam with integrated steel clip for highest insulation characteristics and high loads.
- Connecting nut with M8/M10 combination thread and ½" external thread.
- Pipe clamp with offset glued rubber inlay as sealing.

Advantages/Benefits

- Offset, glued rubber inlay on the two parts of the pipe clamp for ideal insulation and user-friendly assembling.
- Integrated steel clip for high load transmission.
- Time and material saving assembling by installation without sealing past.
- Form-fitting contact surfaces prevent formation of condensation between pipe and pipe clamp.
- Combination connection nut for cost-effective stock keeping and flexibility on the building site.
- Locking screw secured against loss.

ADVANTAGES AT A GLANCE

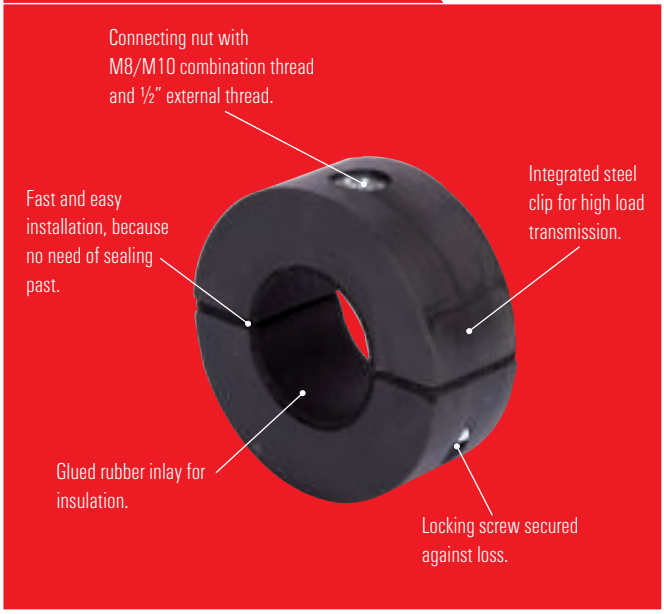

INSTALLATION

Installation tip

- Insert pipe, screw clamp parts together.

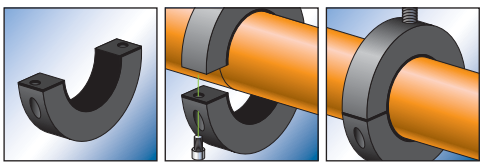

TECHNICAL DATA

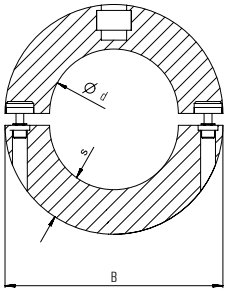

KFT

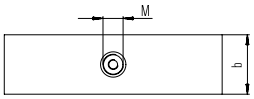

Type	Art. No.	Sales unit	Qty. per box	Max. recom. static load (centr. tension)	Steel sheet thickness	Locking screw	Terminal thread	Width x thickness	Width	Inner diameter horizontal tolerance	Height connecting nut
				$N_{recom.}$	b		M	B x s	B	d	
		pcs.	pcs.	[kN]	[mm]			[mm]	[mm]	[mm]	[mm]
KFT 9.5*	**505576**	1*	10	0.15	30	M 6 x 20	1/2˝/M10/M8	40 x 30	87.0	12.5	14/20/9
KFT 12.7	**505577**	1	10	0.20	30	M 6 x 20	1/2˝/M10/M8	40 x 30	87.0	13.5	14/20/9
KFT 15.8*	**505578**	1*	10	0.21	30	M 6 x 20	1/2˝/M10/M8	40 x 30	87.0	17.5	14/20/9
KFT 17.2*	**505579**	1*	10	0.21	30	M 6 x 20	1/2˝/M10/M8	40 x 30	87.0	18	14/20/9
KFT 18.0	**505580**	1	10	0.21	30	M 6 x 20	1/2˝/M10/M8	40 x 30	87.0	20	14/20/9
KFT 19.5*	**505581**	1*	10	0.21	30	M 6 x 20	1/2˝/M10/M8	40 x 30	87.0	20.5	14/20/9
KFT 21.3	**505582**	1	10	0.26	30	M 6 x 20	1/2˝/M10/M8	40 x 30	87.0	23.3	14/20/9
KFT 22.0	**505583**	1	10	0.26	30	M 6 x 20	1/2˝/M10/M8	40 x 30	87.0	24	14/20/9
KFT 26.9	**505584**	1	10	0.32	30	M 6 x 20	1/2˝/M10/M8	40 x 30	87.0	28.9	14/20/9
KFT 28.0	**505585**	1	10	0.32	30	M 6 x 20	1/2˝/M10/M8	40 x 30	87.0	31	14/20/9
KFT 33.7	**505587**	1	10	0.40	30	M 6 x 20	1/2˝/M10/M8	40 x 30	95.0	35.7	14/20/9
KFT 35.0	**505588**	1	10	0.42	30	M 6 x 20	1/2˝/M10/M8	40 x 30	95.0	37	14/20/9
KFT 40.0*	**505589**	1*	10	0.42	30	M 6 x 20	1/2˝/M10/M8	40 x 30	100	41.5	14/20/9
KFT 41.2*	**505591**	1*	10	0.51	30	M 6 x 20	1/2˝/M10/M8	40 x 30	100	42.5	14/20/9
KFT 42.4	**505592**	1	10	0.51	30	M 6 x 20	1/2˝/M10/M8	40 x 30	103.0	44.4	14/20/9
KFT 44.5*	**505593**	1*	10	0.51	30	M 6 x 20	1/2˝/M10/M8	40 x 30	103.0	46.4	14/20/9
KFT 48.3	**505594**	1	10	0.58	30	M 6 x 20	1/2˝/M10/M8	40 x 30	108.0	50.3	14/20/9
KFT 50.0*	**505595**	1*	10	0.60	30	M 6 x 20	1/2˝/M10/M8	40 x 30	108.0	53	14/20/9
KFT 54.0	**505596**	1	10	0.62	30	M 6 x 20	1/2˝/M10/M8	40 x 30	117.0	57	14/20/9
KFT 57.0	**505597**	1	10	0.65	30	M 6 x 20	1/2˝/M10/M8	40 x 30	117.0	60	14/20/9
KFT 60.3	**505598**	1	10	0.72	30	M 6 x 25	1/2˝/M10/M8	50 x 30	120.0	63.3	14/20/9
KFT 64.0	**505599**	1	10	0.77	30	M 6 x 25	1/2˝/M10/M8	50 x 30	120.0	66.5	14/20/9
KFT 70.0	**505901**	1	10	1.26	30	M 8 x 25	1/2˝/M10/M8	50 x 30	136.0	72	14/20/9
KFT 74.0*	**505902**	1*	10	1.26	30	M 8 x 25	1/2˝/M10/M8	50 x 30	136.0	76	14/20/9
KFT 76.1	**505903**	1	10	1.37	30	M 8 x 25	1/2˝/M10/M8	50 x 30	136.0	78	14/20/9
KFT 80.0*	**505904**	1*	10	1.37	30	M 8 x 25	1/2˝/M10/M8	50 x 30	136.0	82	14/20/9
KFT 84.0*	**505905**	1*	5	1.60	30	M 8 x 25	1/2˝/M10/M8	50 x 30	149.0	85.9	14/20/9
KFT 88.9	**505906**	1	5	1.60	30	M 8 x 25	1/2˝/M10/M8	50 x 30	149.0	90.9	14/20/9
KFT 92.1*	**505907**	1*	5	1.60	30	M 8 x 25	1/2˝/M10/M8	50 x 30	149.0	94	14/20/9
KFT 101.0*	**505908**	1*	5	2.59	40	M 8 x 25	1/2˝/M10/M8	60 x 40	188.0	102	14/20/9
KFT 104.0*	**505909**	1*	5	2.59	40	M 8 x 25	1/2˝/M10/M8	60 x 40	188.0	107	14/20/9
KFT 108.0	**505910**	1	5	2.59	40	M 8 x 25	1/2˝/M10/M8	60 x 40	188.0	109	14/20/9
KFT 114.3	**505911**	1	5	2.74	40	M 8 x 25	1/2˝/M10/M8	60 x 40	194.0	116.3	14/20/9
KFT 129.0*	**505914**	1*	5	3.19	40	M 8 x 25	1/2˝/M10/M8	60 x 40	218.0	132.2	14/20/9
KFT 133.0	**505915**	1	5	3.19	40	M 8 x 25	1/2˝/M10/M8	60 x 40	219.0	133.5	14/20/9
KFT 139.7	**505916**	1	5	3.35	40	M 8 x 25	1/2˝/M10/M8	60 x 40	219.0	141.5	14/20/9
KFT 154.0*	**505917**	1*	4	3.83	40	M 10 x 25	1/2˝/M12	60 x 40	236.8	157.5	14/27
KFT 159.0*	**505918**	1*	4	3.83	40	M 10 x 25	1/2˝/M12	60 x 40	239.0	162	14/27
KFT 168.3*	**505919**	1	4	4.04	40	M 10 x 25	1/2˝/M12	60 x 40	248.0	170.3	14/27
KFT 193.7	**505920**	1	-	5.26	60	M 10 x 35	3/4˝/M16	100 x 60	340.0	195.7	14/28
KFT 204.0	**505921**	1	-	5.20	60	M 10 x 35	3/4˝/M16	100 x 60	340.0	207	14/28
KFT 219.1*	**505922**	1*	-	5.26	60	M 10 x 35	3/4˝/M16	100 x 60	340.0	222.1	14/28

* Delivery time on request, and full boxes.

Refrigerant pipe clamp FRS K

OVERVIEW

FRS K

Properties:

Material	Closed-cell polyurethane foam
Diffusion resistance	7000 µ
Density	80 kg/m³
Compressive strength	0.67 N/mm²
Heat conductivity (at 0 °C)	0.024 W/(m*K)
Locking screw	Flat head screw with combination recessed head
Temperature range	-45 °C to + 105 °C
Fire behavior	DIN 4102: class B2

DESCRIPTION

- Pipe clamp with insulation made by elastomer with PU hard foam shell which is glued on the clamp.
- On the bigger diameters a foamed load distribution plate allows high load bearing capacity.
- Insulation with self-adhesive lock.
- Combination nut M8/M10, M12/M16.

Advantages / Benefits

- PU-insulation body for high insulation, coordinated to standard insulation layer thicknesses.
- Partly compression-proof PU-hard foam body with foamed load distribution sheet for high load absorption and higher approvable loads.
- High durability.
- Step-shaped sealing at the insulation for better sealing for the small sizes.
- Simple installation due to large opening angle and glued insulation.
- Locking screw with large combination recessed is secured against loss.

INSTALLATION

Installation tip

- Insert pipe, pull protective film from insulation, glue and screw together clamp parts.
- On front side, glue sealing insulation to refrigeration clamp.

TECHNICAL DATA

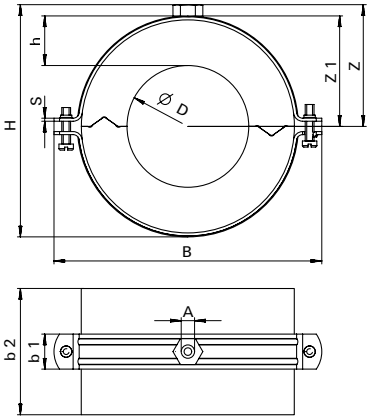

FRS K

Type	Art. No.	Sales unit	Qty. per box	Size	Load distribution sheet (on both sides)	Max. recom. static load (centr. tension)	Thread	Width across flats	Connecting nut height	Width	Width	Height	Height	Height	Height
								A/F		B	b2	h	H	Z1	Z
		pcs.	pcs.	[Inch]		[kN]			[mm]	[mm]	[mm]	[mm]	[mm]	[mm]	[mm]
FRS K12/13	**506486**	1	15	-	no	0.10	M8/M10	13	13.5	77	50	13	57.5	19.5	33
FRS K15/13	**506487**	1	15	1/4“	no	0.11	M8/M10	13	13.5	85	50	13	62	22	35.5
FRS K17-18/13	**506488**	1	15	3/8“	no	0.12	M8/M10	13	13.5	86	50	13	62	22	35.5
FRS K21-22/13	**506489**	1	10	1/2“	no	0.13	M8/M10	13	13.5	91	50	13	67	25	38
FRS K27-28/13	**506490**	1	10	3/4“	no	0.15	M8/M10	13	13.5	99	50	13.5	70	29	44
FRS K34-35/13	**506491**	1	10	1“	no	0.17	M8/M10	13	18	105	50	14	86	32	52
FRS K42/13	**506492**	1	14	1 1/4“	yes	0.36	M8/M10	13	18	115	50	14	99	37.5	56
FRS K48-49/13	**506493**	1	14	1 1/2“	yes	0.39	M8/M10	13	18	118	50	14	105	40.5	59
FRS K54/13	**507699**	1	14	-	yes	0.42	M8/M10	13	18	125	50	14	109.5	43	62
FRS K60/13	**506494**	1	14	2“	yes	0.45	M8/M10	13	18	132	50	15	119	47	65.5
FRS K12/19*	**506495**	1	14	-	no	0.14	M8/M10	13	13.5	90	50	19	69	25	39
FRS K15/19*	**506496**	1	14	1/4“	no	0.15	M8/M10	13	13.5	90.5	50	19	72	27	40.5
FRS K17-18/19	**506497**	1	10	3/8“	no	0.15	M8/M10	13	13.5	99	50	19.5	75	28	42
FRS K21-22/19	**506498**	1	10	1/2“	no	0.16	M8/M10	13	13.5	99	50	19.5	75	28	42
FRS K27-28/19	**506499**	1	10	3/4“	no	0.18	M8/M10	13	18	106	50	20	93	35	53
FRS K34-35/19	**506500**	1	10	1“	no	0.20	M8/M10	13	18	115	50	20.3	100	38	56
FRS K42/19	**506501**	1	14	1 1/4“	yes	0.42	M8/M10	13	18	125	50	21.5	112	44	62
FRS K48-49/19	**506502**	1	14	1 1/2“	yes	0.45	M8/M10	13	18	132	50	21.5	119	47.5	65.5
FRS K54/19	**507700**	1	14	-	yes	0.48	M8/M10	13	18	143	50	22	126	50.5	68.5
FRS K60/19	**506503**	1	17	2“	yes	0.51	M8/M10	13	18	147	50	22	132	54	72
FRS K64/19*	**506504**	1	17	-	yes	0.53	M8/M10	13	18	149	50	22	136.5	56	74
FRS K70/19*	**506505**	1	17	-	yes	0.56	M8/M10	13	18	161	50	22	145	59.5	78
FRS K76/19	**506506**	1	14	2 1/2“	yes	0.60	M8/M10	13	18	162.5	50	22	150	62	80
FRS K89/19	**506508**	1	14	3“	yes	0.66	M8/M10	17	18	188	50	22	165	68.5	86.5
FRS K102/19*	**506509**	1	5	-	yes	1.69	M8/M10	17	18	199	100	22.5	180	94.5	94.5
FRS K108/19*	**506510**	1	5	-	yes	1.77	M8/M10	17	18	204	100	22.5	185	78	97
FRS K114/19	**506511**	1	5	4“	yes	1.84	M12/M16	20	30	228	100	22.5	201	82	112
FRS K133/19*	**507786**	1	4	-	yes	2.07	M12/M16	20	30	247	100	23	221	92.5	122
FRS K139/19	**507787**	1	4	5“	yes	2.14	M12/M16	20	30	255	100	23	227	95	125
FRS K168/19	**507788**	1	4	6“	yes	2.49	M12/M16	20	30	281	100	23	256	109	139

* Delivery time on request and full boxes.

Sprinkler clamp FRSP

OVERVIEW

FRSP

Properties:

Material	Steel DX51D+Z 275 MA-C (material no. 1.0226+Z) acc. to DIN EN 10327
Zinc plating	Sendzimir zinc-plated, approx. 10 µm

DESCRIPTION

- Sprinkler loop with height adjustment nut.

Advantages/Benefits

- Simple, quick installation.
- Simple subsequent height adjustment using adjustable nut.

INSTALLATION

Installation instructions

- Insert pipe into the loop.
- Close clamp using adjustable nut.
- Tighten threaded rod.

TECHNICAL DATA

FRSP

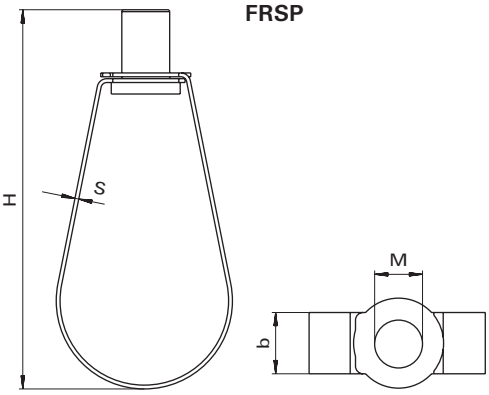

Type	Art. No.	Qty. per box	Max. recom. static load (centr. tension)	Thread	Width x thickness clamp band	Height
		pcs.	$N_{recom.}$ [kN]	M	b x s [mm]	H [mm]
FRSP 1/2"	**047125**	100	1.8	M 10	16 x 1	86
FRSP 3/4"	**047126**	100	1.8	M 10	16 x 1	86
FRSP 1"	**047127**	100	1.8	M 10	16 x 1	89
FRSP 1 1/4"	**047128**	100	1.8	M 10	16 x 1	98
FRSP 1 1/2"	**047167**	100	1.8	M 10	16 x 1	105
FRSP 2"	**047168**	100	1.8	M 10	16 x 1	117
FRSP 2 1/2"	**047169**	50	2.7	M 10	22 x 2	130
FRSP 3"	**047170**	50	2.7	M 10	22 x 2	143
FRSP 4"	**047172**	25	4.5	M 10	22 x 2	175
FRSP 5"	**047173**	20	4.5	M 12	25 x 3.0	213
FRSP 6"	**047174**	15	5.6	M 12	25 x 3.0	250
FRSP 8"	**047226**	10	5.6	M 12	25 x 3.0	312

Sprinkler clamp FRSL

OVERVIEW

FRSL

Properties:

Material clamp band	Steel DX51D acc. to DIN EN 10346, material no. 1.0226 (Z140 N-A-C) electro zinc plated acc. to BHV 165
Material milled nut	Steel 11 SMnPb 30 acc. to DIN EN 10087, material no. 1.0718
Zinc plating	Electro zinc plated, min. 8 µm (approx.)

VdS

DESCRIPTION

- Sprinkler clamp with simple, divisible clamp band to insert the pipe and a height adjustment.

Advantages/Benefits

- Simple, quick installation by divisible clamp band to insert the pipe.
- Simple subsequent height adjustment using adjustable milled nut.

INSTALLATION

Installation tip

- Insert pipe into the loop.
- Close clamp using adjustable nut.
- Tighten threaded rod.

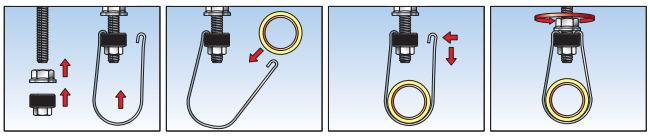

TECHNICAL DATA

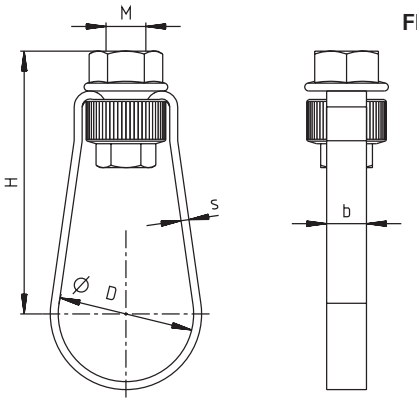

FRSL

Type	Art. No.	Qty. per box	Max. recom. static load (centr. tension) $N_{recom.}$	Nominal size	Thread	Width x thickness	Height
		pcs.	[kN]	[inch]	M	b x s [mm]	H [mm]
FRSL 34	**513302**	50	2	1"	M 10	10 x 1.8	67
FRSL 43	**513303**	50	2	1 1/4"	M 10	10 x 1.8	67
FRSL 49	**513304**	50	2	1 1/2"	M 10	10 x 1.8	72
FRSL 60	**513307**	50	2	2"	M 10	10 x 1.8	81
FRSL 76	**513308**	25	3.5	2 1/2"	M 10	10 x 2.5	98
FRSL 90	**513309**	25	3.5	3"	M 10	10 x 2.5	113
FRSL 115	**513310**	25	3.5	4"	M 10	10 x 2.5	143
FRSL 140	**513311**	25	5	5"	M 12	13 x 2.5	157
FRSL 170	**513312**	25	5	6"	M 12	13 x 2.5	187

U-Bolt ETR

OVERVIEW

ETR

Properties:

Material	Steel with min. tensile strength of 360 N/mm²
Zinc plating	Electro zinc plated

DESCRIPTION

- U-bolt, electro zinc plated with metric thread.
- Hexagonal nuts are enclosed loose.

Advantage / Benefit

- Good for use as a guide mounting.

INSTALLATION

Installation tip

- U-bolt will be exposed to no bending stress.
- When used as pipe guiding mounting, the pipe should continue to move freely.

TECHNICAL DATA

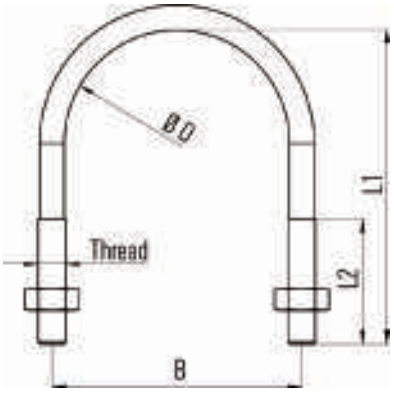

ETR

Type	Art. No.	Qty. per box	Outer carton	Thread M	Size	Width B	length L1	length L2
		pcs.	pcs.		[inch]	[mm]	[mm]	[mm]
ETR 8 - 13	**024415**	10	100	M 6	1/4"	20	30	18
ETR 12 - 17	**024416**	10	100	M 6	3/8"	24	35	18
ETR 15 - 21	**024417**	10	100	M 6	1/2"	28	40	22
ETR 20 - 27	**024418**	10	50	M 8	3/4"	36	50	30
ETR 26 - 34	**024419**	10	50	M 8	1"	43	55	30
ETR 33 - 42	**024420**	10	50	M 8	1 1/4"	51	68	35
ETR 40 - 49	**024421**	10	50	M 8	1 1/2"	58	70	35
ETR 50 - 60	**024422**	10	50	M 8	2"	69	80	35
ETR 60 - 70	**024423**	10	50	M 10	-	82	100	38
ETR 66 - 76	**024424**	10	50	M 10	2 1/2"	88	110	45
ETR 70 - 82	**024425**	10	50	M 10	-	94	115	45
ETR 80 - 90	**024426**	10	50	M 10	3"	102	115	45
ETR 90 - 102	**024427**	5	50	M 12	3 1/2"	116	145	50
ETR 100 - 108	**024428**	5	50	M 12	-	122	150	50
ETR 102 - 114	**024429**	5	50	M 12	4"	128	156	55
ETR 121 - 127	**024430**	5	50	M 12	-	141	170	55
ETR 126 - 133	**024431**	5	50	M 12	-	147	180	65
ETR 131 - 140	**024432**	5	25	M 14	5"	156	185	65
ETR 143 - 153	**024433**	5	25	M 14	-	169	193	65
ETR 150 - 159	**024434**	5	25	M 14	-	175	200	65
ETR 168	**024435**	5	25	M 14	6"	184	210	65
ETR 193.7	**024436**	5	25	M 14	-	209	232	65
ETR 219	**024437**	5	25	M 14	8"	236	270	65

Hose clamp SGS

OVERVIEW

SGS

Properties:

Abbreviation	Worm	Housing and Band
W 2	CQ 15 DIN 1654	Chromium steel 1.4016 acc. to DIN EN 10088 or equivalent corrosion-resistant steel

DESCRIPTION

- Hose clamps for large clamping ranges with crimped band edges and rounded housing base.

Advantages / Benefits

- Flexible band for optimal seat and sealing even with out-of-round connections and hoses.
- Short housing base for optimal adaptation and high uniformly distributed radial forces.

INSTALLATION

Installation tip

- The optimal tightening torque depends on hose diameter and hose material.
- The tightening torques are to be observed in accordance with the specified values.

- **Caution!** If the tightening torque is above the optimal value, the seal is endangered.

TECHNICAL DATA

SGS

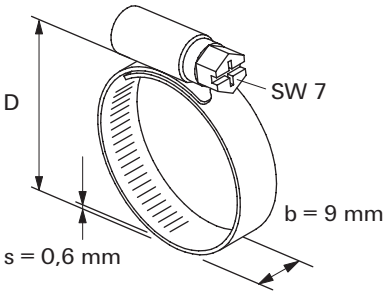

Type	Art. No.	Qty. per box	Static tightening torque	Clamping range D	Width x thickness clamp band b x s
		pcs.	[Nm]	[mm]	[mm]
SGS 9 W2					
SGS 9 W2 8 - 12	**045517**	100	2.0	8 - 12	9.0 x 0.6
SGS 9 W2 10 - 16	**045518**	100	2.0	10 - 16	9.0 x 0.6
SGS 9 W2 12 - 20	**045519**	100	3.0	12 - 20	9.0 x 0.6
SGS 9 W2 16 - 27	**045520**	100	3.0	16 - 27	9.0 x 0.6
SGS 9 W2 20 - 32	**045521**	100	3.0	20 - 32	9.0 x 0.6
SGS 9 W2 25 - 40	**045522**	100	3.0	25 - 40	9.0 x 0.6
SGS 9 W2 32 - 50	**045523**	100	3.0	32 - 50	9.0 x 0.6
SGS 9 W2 40 - 60	**045524**	25	3.0	40 - 60	9.0 x 0.6
SGS 9 W2 50 - 70	**045525**	25	3.0	50 - 70	9,0 x 0,6
SGS 9 W2 60 - 80	**045526**	25	3.0	60 - 80	9,0 x 0,6
SGS 9 W2 70 - 90	**045527**	25	3.0	70 - 90	9,0 x 0,6
SGS 9 W2 80 -100	**045528**	25	3.0	80 - 100	9.0 x 0.6
SGS 9 W2 90 -110	**045529**	25	3.0	90 - 110	9.0 x 0.6
SGS 9 W2 100 -120	**045530**	25	3.0	100 - 120	9.0 x 0.6
SGS 9 W2 110 -130	**045531**	25	3.0	110 - 130	9.0 x 0.6
SGS 9 W2 120 -140	**045532**	25	3.0	120 - 140	9.0 x 0.6

ADVANTAGES AT A GLANCE

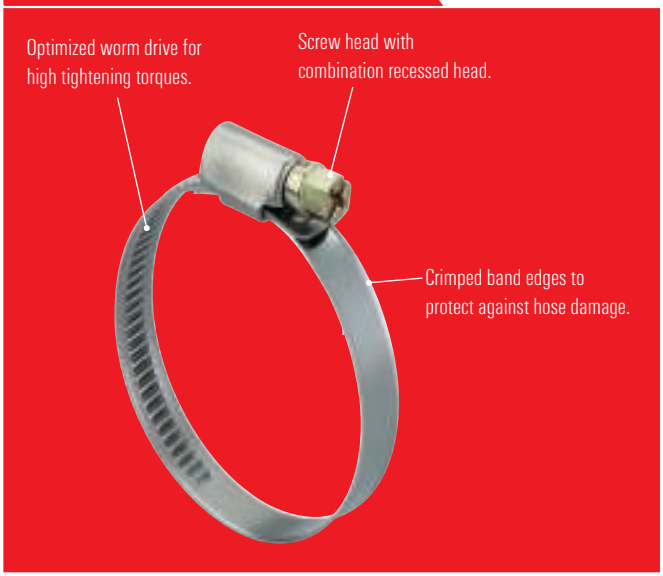

Installation System MS-L

A complete installation system suitable for:

- electrical installation, like cable trays, data lines etc.
- heating and sanitary supply pipes
- air duct and ventilation

Channels
MS 27/18, MS 28/30 **Page 38**

Cantilever
ALK **Page 40**

Connectors
FHS Clix **Page 43**

Channel connectors
SF **Page 47**

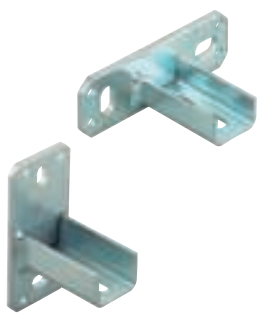

EMS **Page 42**

GLK **Page 42**

ALKS **Page 40**

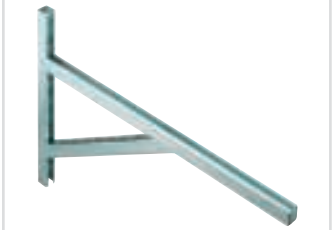

HS **Page 46**

Clix MK **Page 46**

HG **Page 45**

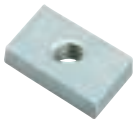

SM **Page 46**

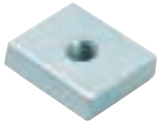

MW **Page 48**

TKR **Page 49**

SV **Page 42**

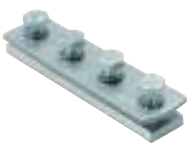

Channel MS-L

OVERVIEW

MS 27/18

MS 28/30

Properties:

Material	Steel DX51D+Z 275 MA-C (material no. 1.0226+Z) acc. to DIN EN 10327
Zinc plating	Sendzimir zinc plated, approx. 20 µm

DESCRIPTION

- C profiled channel for horizontal and vertical installation.

Advantages / Benefits

- High installation flexibility due to different hole geometries.
- Specially synchronised connection parts allow for assembly of simple, safe and versatile constructions.
- Simple cutting and installation due to stamped grid dimensions on the rail side.

INSTALLATION

- Mechanical, electrical and ventilation systems.

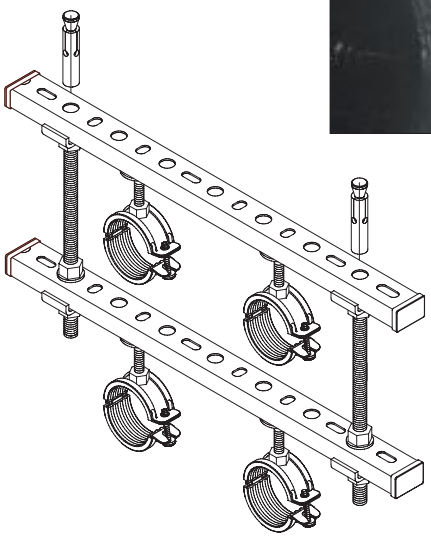

TECHNICAL DATA

MS 27/18

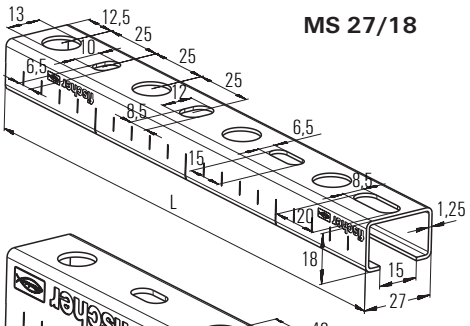

MS 28/30

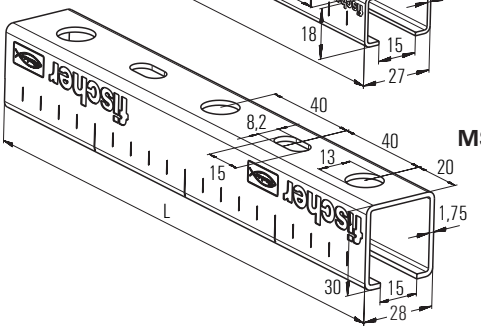

Type	Art. No.	Qty. per box	Length L	Weight
		pcs.	[mm]	[kg/m]
MS 27/18/1.25 - 2 m	**079560**	1	2000	0.66
MS 27/18/1.25 - 3 m	**079557**	1	3000	0.66
MS 28/30/1.75 - 2 m	**079561**	1	2000	1.25
MS 28/30/1.75 - 3 m	**079558**	1	3000	1.25

LOADS

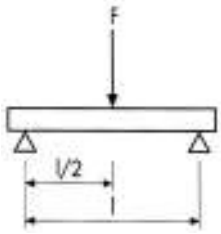

Type		Span l 0.5 m	0.75 m	1 m
MS 27/18/1.25	Max. rec. static load F [kN]	0.43	0.29	0.19
MS 28/30/1.75	Max. rec. static load F [kN]	1.30	0.87	0.65

Load-bearing capacity of MS-L channels

TECHNICAL VALUES

Profile	Profile weight	Profile cross section	Moment of inertia		Section modulus	
		A	I_y	I_z	W_y	W_z
	[kg/m]	[cm²]	[cm⁴]	[cm⁴]	[cm³]	[cm³]
Channel MS						
27/18	0.66	0.84	0.36	0.96	0.34	0.71
28/30	1.25	1.59	1.77	2.09	1.02	1.49

LOAD CASE 1

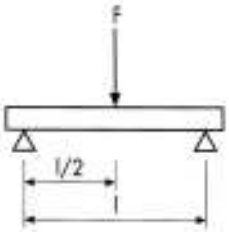

LOAD CASE 2

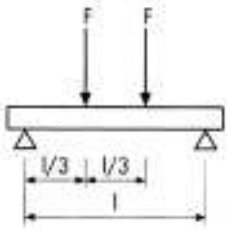

LOAD CASE 3

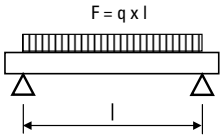

MS 27/18

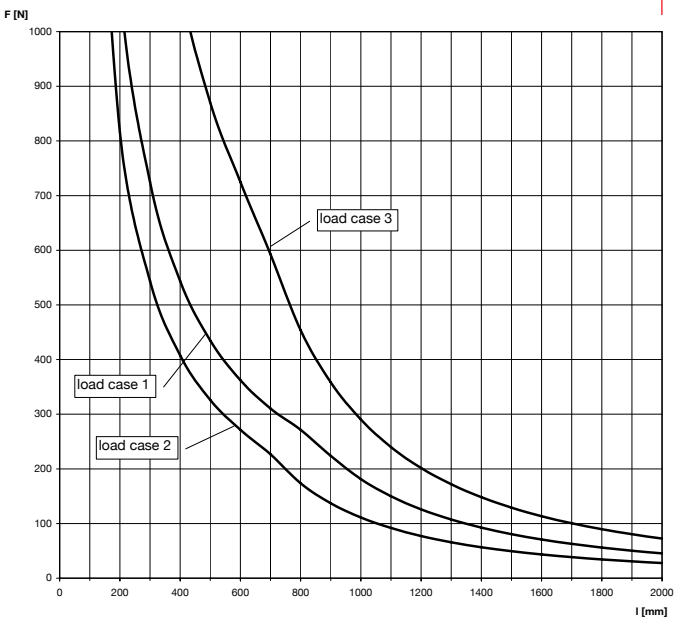

MS 28/30

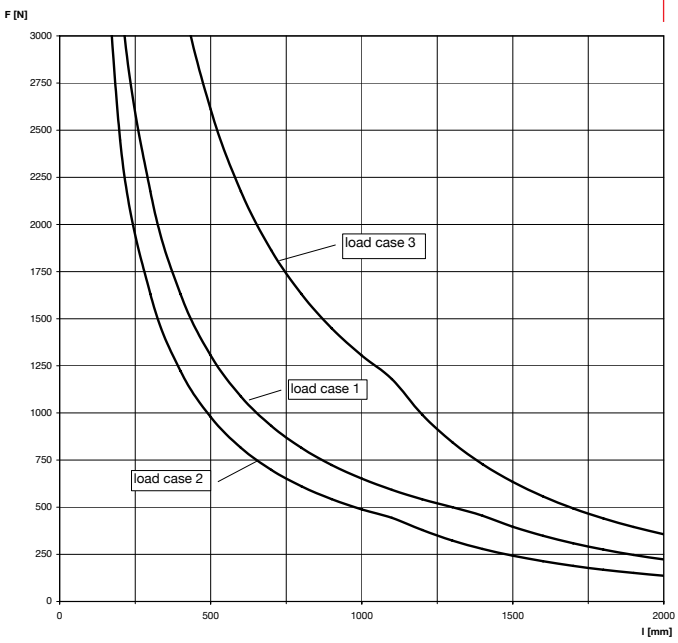

For the load curves, the permissible steel strain $\sigma_{adm.}$ = 160 N/mm and the maximum deflection under load l/200 are not exceeded.

Fixings and screw fastenings must be calculated accordingly.

Cantilever arm ALK

OVERVIEW

ALK

ALKS

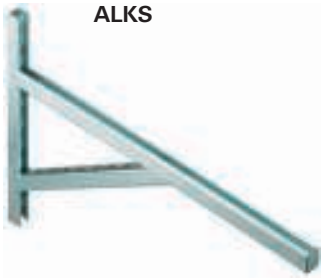

Properties:

Material	Base plate: steel DC01 (material no. 1.0330) acc. to DIN EN 10111 Channel: steel S235JR (material no. 1.0037) acc. to DIN EN 10025
Zinc plating	Electro zinc plated, min. 13 µm

DESCRIPTION

- Cantilever arms made of C profiled channels.

Advantages / Benefits

- Slots in the rail offer versatile installation possibilities.
- Versatile usage possibilities for stepped lengths.

INSTALLATION

- Good fastening possibilities using suitable fixing.
- Slots in the base plate offer good height adjustment.

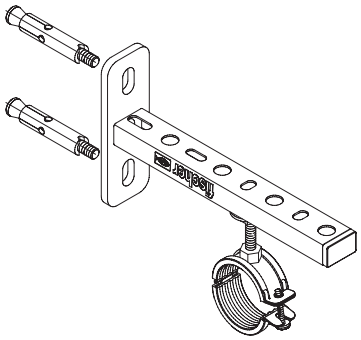

TECHNICAL DATA

ALK 27/18

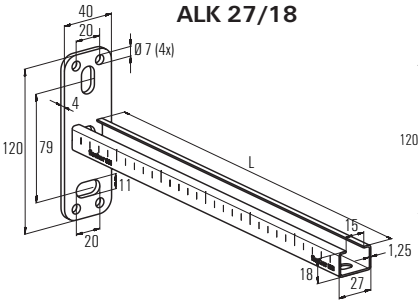

ALK 28/30

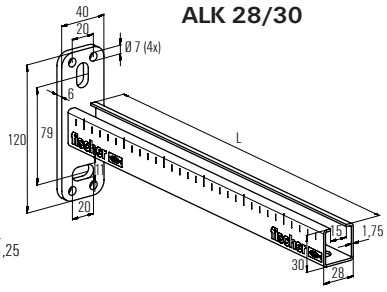

ALKS

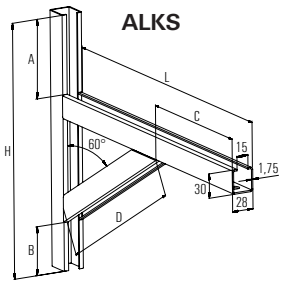

Type	Art. No.	Qty. per box pcs.	Profile	Height H [mm]	Length L [mm]	Height A [mm]	Height B [mm]	Length C [mm]	Length D [mm]
Cantilever arm ALK									
ALK 27/18 - 200	**079575**	20	27/18	-	200	-	-	-	-
ALK 27/18 - 300	**079576**	20	27/18	-	300	-	-	-	-
ALK 28/30 - 200	**079577**	10	28/30	-	200	-	-	-	-
ALK 28/30 - 320	**079578**	10	28/30	-	320	-	-	-	-
ALK 28/30 - 440	**079579**	10	28/30	-	440	-	-	-	-
Cantilever arm ALKS									
ALKS 28/30 - 400	**063581**	5	28/30	315	400	98	60	180	254
ALKS 28/30 - 600	**063594**	5	28/30	400	600	100	70	254	400

Load-bearing capacity of ALK cantilever brackets

LOAD CASE 1

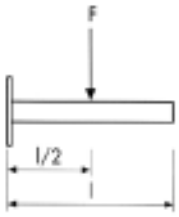

LOAD CASE 2

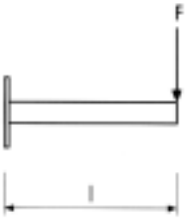

LOAD CASE 3

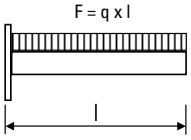

ALK 27/18

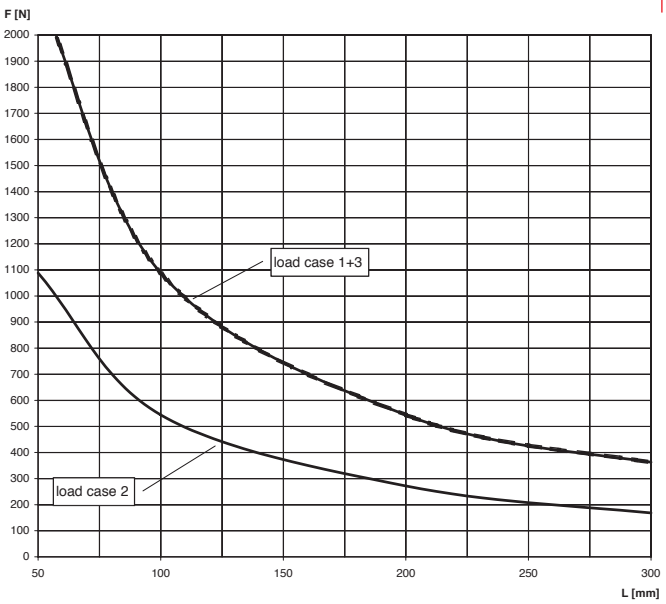

ALK 28/30

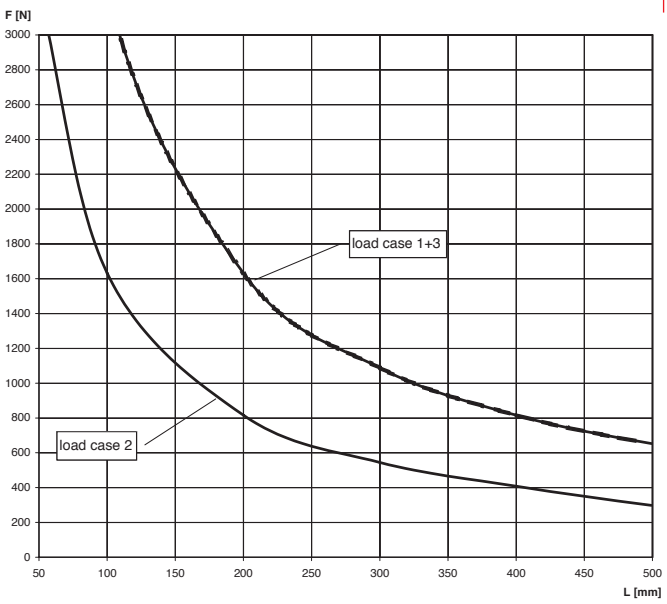

For the load curves, the permissible steel strain $\sigma_{adm.}$ = 160 N/mm and the maximum deflection under load l/150 are not exceeded.

Fixings and screw fastenings must be calculated accordingly.

Load-bearing capacity of ALKS cantilever brackets

LOADS

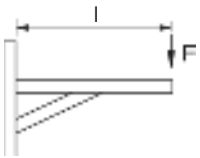

Cantilever arm ALKS 28/30-400		
Length l in mm	200	400
Max recom. load F_{rec} in kN	5.0	1.3

Cantilever arm ALKS 28/30-600		
Length l in mm	300	600
Max recom. load F_{rec} in kN	5.0	0.9

Cover cap AK

OVERVIEW

AK

Type	Art. No.	Qty. per box pcs.	for profile
AK 27/18	**079565**	100	27/18
AK 28/30	**079566**	100	28/30

Properties:

Material	Polyethylene, black

Channel connector SV

OVERVIEW

SV 27

Properties:

Material	Steel DC01 (material no. 1.0330) acc. to DIN EN 10130
Zinc plating	Electro zinc plated, 5 µm

DESCRIPTION

- Quick and pre-assembled for channels.

Advantages / Benefits

- Pre-assembled with screws and special washers.

INSTALLATION

TECHNICAL DATA

Type	Art. No.	Qty. per box pcs.
SV 27	**079660**	20

Sliding insert GLK

Codes and characteristics see on page 113

Rubber inlay EMS

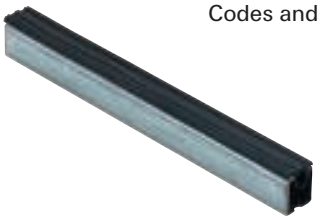

Codes and characteristics see on page 123

T-head bolt FHS Clix

OVERVIEW

FHS Clix

FHS Clix-N

Properties:

Material	Steel S235 JR (material no. 1.0037) acc. to DIN EN 10025
Zinc plating	Electro zinc plated, min. 5 µm
Steel grade	4.8

DESCRIPTION

- Quick lock hammer head bolt.
- FHS Clix-N: patented T-head threaded bolt with grooved pin.
- Grooved pin can be shortened using bolt cutter BOL N.

Advantages / Benefits

- Simple, fast and effective installation.
- Retrofitting in rails possible.
- Simple alignment in the rail.
- FHS Clix-N: simple height correction due to grooved pin.
- Fits in all the usual rail profiles with 15 mm slot width.

INSTALLATION

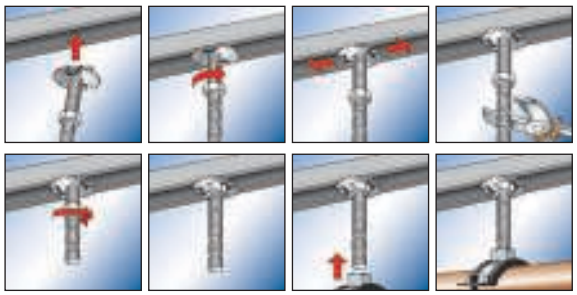

TECHNICAL DATA

FHS Clix

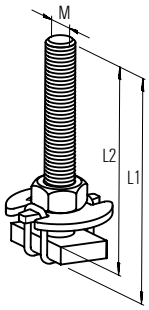

FHS Clix-N

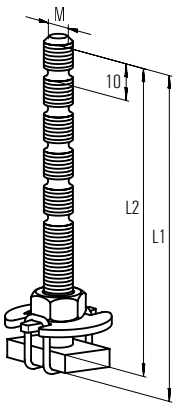

Type	Art. No.	Qty. per box	Thread M	Length (L1)	Length (L2)
		pcs.		[mm]	[mm]
T-head bolt FHS Clix					
FHS Clix 8 x 20	**079620**	100	M 8	25	20
FHS Clix 8 x 30	**079621**	100	M 8	30	25
FHS Clix 8 x 40	**079622**	100	M 8	40	35
FHS Clix 8 x 60	**079624**	100	M 8	60	55
FHS Clix 8 x 80	**079626**	50	M 8	80	75
FHS Clix 8 x 100	**079628**	50	M 8	100	95
FHS Clix 10 x 30	**079635**	100	M 10	30	25
FHS Clix 10 x 40	**079636**	100	M 10	40	35
FHS Clix 10 x 60	**079637**	100	M 10	60	55
FHS Clix 10 x 100	**505554**	50	M 10	100	95
T-head bolt FHS Clix-N					
FHS Clix-N M 8 x 90	**079605**	50	M 8	90	85
FHS Clix-N M 8 x 140	**079606**	50	M 8	140	135

LOADS

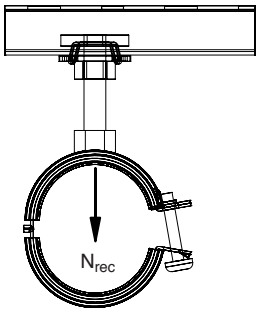

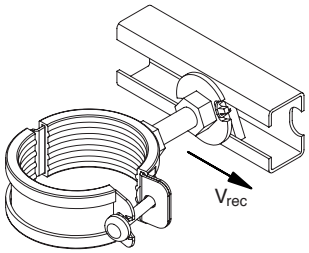

Type	Profile	Max. recom. load (tension) $N_{rec.}$ [kN]	Max. recom. load (shear) $V_{rec.}$ [kN]	Tightening torque [Nm]
T-head bolt FHS Clix				
M 8	27/18	1.7	0.2	5
	28/30	2.0	0.2	5
M 10	27/18	2.0	0.3	8
	28/30	2.2	0.3	8
T-head bolt FHS Clix-N				
M 8	27/18	1.7	0.2	5
	28/30	2.0	0.2	5

Bolt cutter BOL N

OVERVIEW

BOL N

DESCRIPTION

- Suitable for cutting threaded rods and FHS Clix-N to size.

Type	Art. No.	Qty. per box pcs.
BOL N	**079821**	1

Channel washer HK 27

OVERVIEW

HK 27

Properties:

Material	Steel (material no 1.0037) acc. to DIN EN 10025
Zinc plating	Electro zinc plated, min. 5 µm

DESCRIPTION

- Can be used for proper fastening of channels with a fixing, e.g. fischer anchor bolt.
- Used to secure connections.

Advantage / Benefit

- Prevents the rail from bending.

TECHNICAL DATA

HK 27

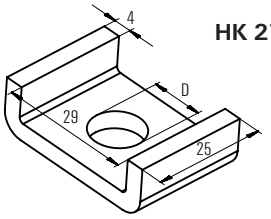

Type	Art. No.	Qty. per box pcs.	Hole D [mm]
HK 27	**079650**	50	11.5

Channel nut HG 27

OVERVIEW

HG 27

Properties:

Material	Steel S235 JR (material no 1.0037) acc. to DIN EN 10025
Zinc plating	Electro zinc plated, min. 5 µm

DESCRIPTION

- Threaded plate fitting in to the channel MS 27/18 and MS 28/30.

Advantages / Benefits

- Simple installation.
- Retrofitting in rails possible.

INSTALLATION

Installation tip

- After alignment, the threaded plate should be secured with the nut and washer.

TECHNICAL DATA

HG 27

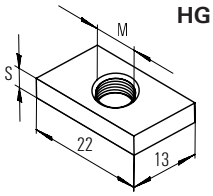

Type	Art. No.	Qty. per box pcs.	Thread M	Thickness S [mm]
HG 27 M 6	**049480**	200	M 6	4
HG 27 M 8	**079595**	100	M 8	5
HG 27 M 10	**079596**	100	M 10	5

LOADS

Type	Profile	Max. recom. load (tension) $N_{rec.}$ [kN]	Max. recom. load (shear) $V_{rec.}$ [kN]	Tigthening torque [Nm]
HG 27 M 6	27/18	1.7	0.2	5
	28/30	2.0	0.2	5
HG 27 M 8	27/18	1.7	0.4	8
	28/30	2.0	0.4	8
HG 27 M 10	27/18	2.0	0.5	10
	28/30	2.2	0.5	10

Female channel connector Clix MK

OVERVIEW

Clix MK

Properties:

Material	Steel S235 JR (material no 1.0037) acc. to DIN EN 10025
Zinc plating	Electro zinc plated, min. 5 µm

DESCRIPTION

- Female channel connector for threaded road and pipe clamp installations.

Advantages / Benefits

- Simple, fast and effective installation.
- Retrofitting in rails possible.

INSTALLATION

Installation tips

- Introduce fischer Clix MK into the rail or bracket and turn 90°.
- After alignment, the threaded plate should be secured with nut and washer.

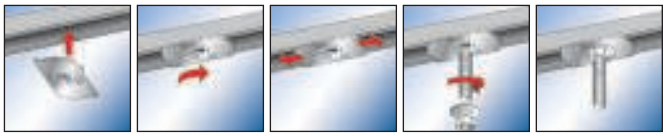

TECHNICAL DATA

Clix MK

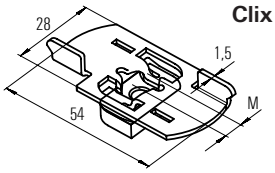

Type	Art. No.	Qty. per box pcs.	Thread M
Clix MK 6	**063692**	100	M 6
Clix MK 8	**063693**	100	M 8
Clix MK 10	**063694**	100	M 10

LOADS

Type	Profile	Max. recom. load (tension) $N_{rec.}$ [kN]	Max. recom. load (shear) $V_{rec.}$ [kN]	Tightening torque [Nm]
Clix MK M 6	27/18	1.7	0.3	8
	28/30	2.0	0.4	8
Clix MK M 8	27/18	1.7	0.3	8
	28/30	2.0	0.4	8
Clix MK M 10	27/18	2.0	0.3	8
	28/30	2.2	0.4	8

T-head bolt HS 38

Codes and characteristics see on page 59

Sliding nut SM

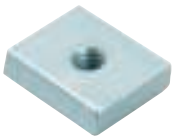

Codes and characteristics see on page 60

Saddle flange SF

OVERVIEW

SF Q 27

SF L 27

Properties:

Material	Steel DD11 (material no. 1.0332) acc. to DIN EN 10111
Zinc plating	Electro zinc plated, min. 8 µm

DESCRIPTION

- Connection element between fischer channels and building and channels with channels.

Advantages / Benefits

- Solid connecting element for load-bearing constructions.
- Simple installation by inserting the mounting rail in the saddle.

INSTALLATION

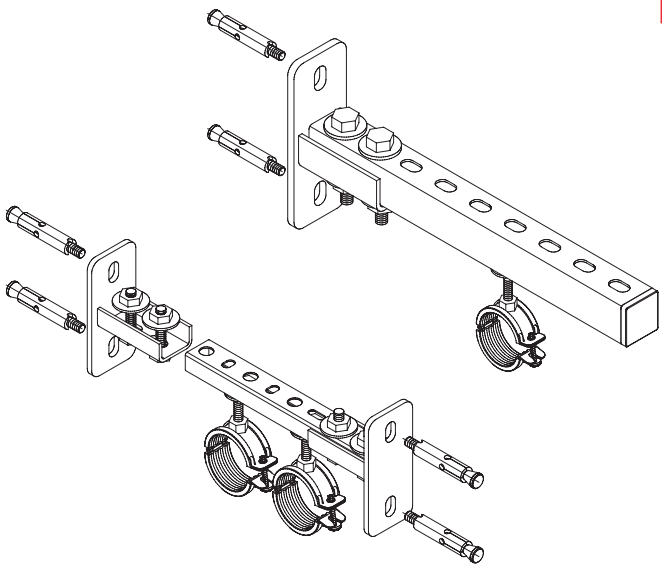

TECHNICAL DATA

SF Q 27

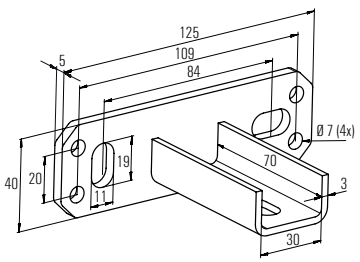

SF L 27

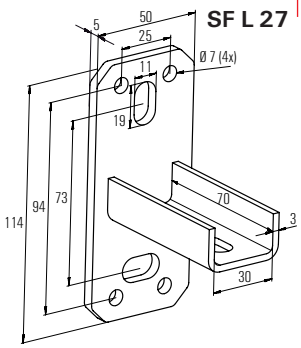

Type	Art. No.	Qty. per box pcs.	Version
SF Q 27	**079409**	15	horizontal
SF L 27	**079585**	15	vertical

LOADS

For connection channel – channel

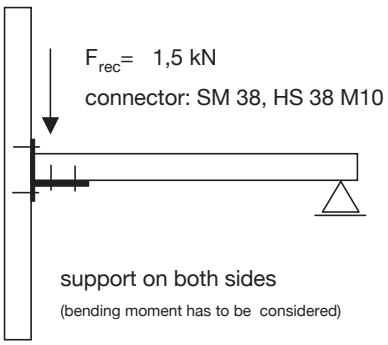

Installation angle bracket MW

OVERVIEW

MW 27–45°

MW 27–90°

Properties:

Material	Steel S235 JR (material no. 10037) acc.DIN EN 10025
Zinc plating	Electro zinc plated, min. 8 µm

DESCRIPTION

- Angle brackets for connection of channels.

Advantages / Benefits

- Installation advantages in producing load-bearing constructions in connection with fischer mounting rails.
- Variable installation possibilities.

INSTALLATION

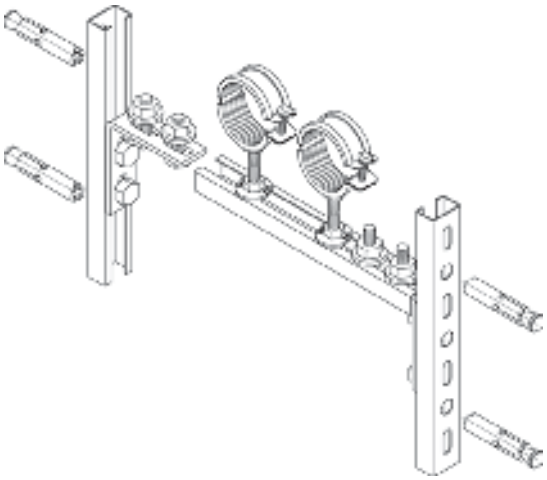

TECHNICAL DATA

MW 27–45°

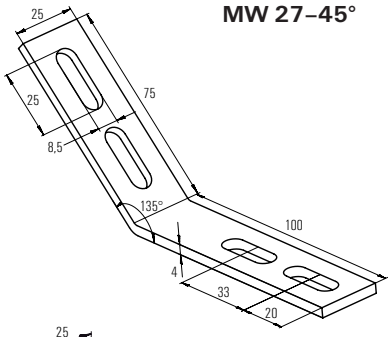

MW 27–90°

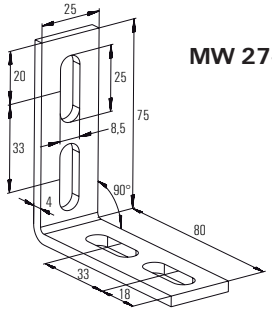

Type	Art. No.	Qty. per box pcs.
MW 27-45°	**079656**	25
MW 27-90°	**079655**	25

LOADS

For connection channel – channel

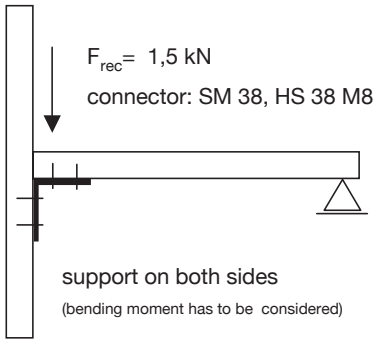

Beam clamp TKR

OVERVIEW

TKR 27/18

Properties:

Material	Material plate: Steel DD11 (material no. 1.0332) acc. DIN EN 10111 Material U-bolt pipe hanger: Steel (material no. 10037) acc. DIN EN 10025 Hexagon nut: Material: Steel acc. to ISO 898-2 table 4, resistance min. 4
Zinc plating	Electro zinc plated, min. 5 µm

DESCRIPTION

- Stirrup for fastening profile rails to steel girders.

Advantages / Benefits

- No drilling or welding necessary.
- Adjustment is possible at any time.
- Due to the different lengths of the claw sides, the fischer clamp supporter can be fastened to all standard T-beams.

INSTALLATION

- Two clamp supports are necessary for fastening to the steel gird.

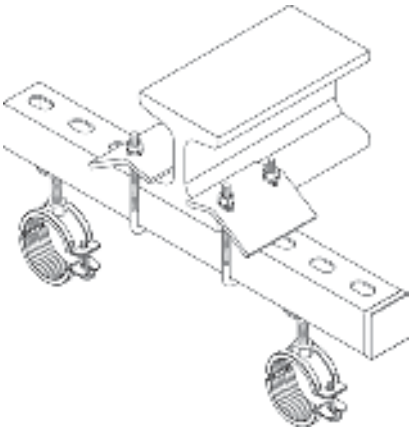

TECHNICAL DATA

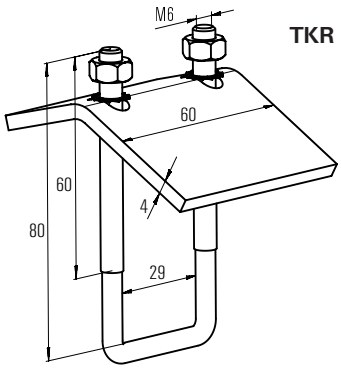

TKR 27/18

Type	Art. No.	Qty. per box	Fixing thickness	for profile
		pcs.	[mm]	
TKR 27/18	**079411**	25	0 - 29	27/18 + 28/30

LOADS

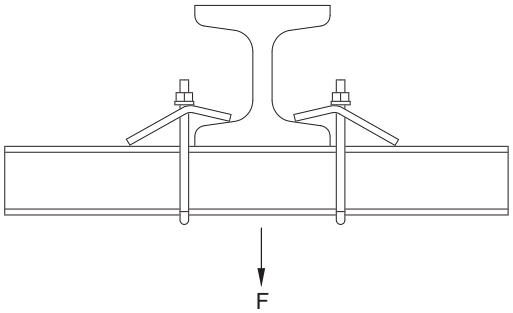

Type	Thread	Max. recom. load / pair	Tightening torque
		$F_{rec.}$ [kN]	[Nm]
TKR 27/18	M6	2.8	5

Installation System MS

A complete installation system suitable for:

- industrial piping
- heating and sanitary supply pipes
- ventilation, air duct
- electrical installation, like cable trays, data lines etc.
- solar panels installations

Channels
MS 38/40, MS 40/60 **Page 52**

Cantilever
ALK /ALK Q **Page 54**

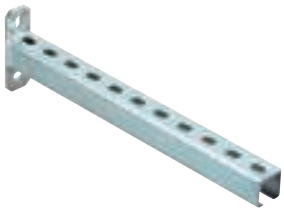

Connectors
FHS Clix S **Page 58**

Channel connectors
SF **Page 63**

UWS **Page 66**

EMS **Page 57**

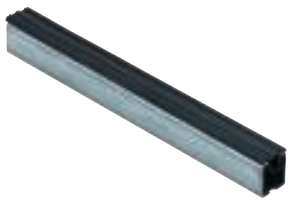

GLK **Page 57**

AK **Page 56**

HS **Page 59**

HG **Page 61**

SM **Page 60**

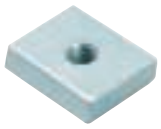

HK **Page 62**

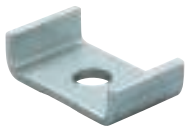

MW **Page 65**

TKR **Page 74**

SV **Page 56**

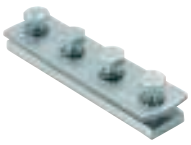

TSF **Page 64**

WK **Page 67**

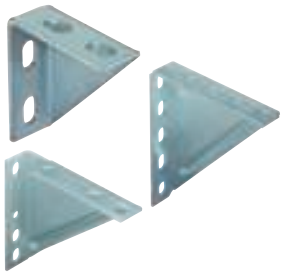

FSB 45° **Page 57**

VB **Page 57**

UHRS **Page 57**

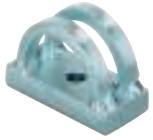

Channel MS

OVERVIEW

MS 38/40

MS 40/60

Properties:

Material	Steel DX51D+Z 275 MA-C (material no. 1.0226+Z) acc. to DIN EN 10327
Zinc plating	Sendzimir zinc-plated, approx. 20 µm

DESCRIPTION

- C-profiled Channel for horizontal and vertical installation.
- Fast and streamlined fastening of pipe tracks and load-bearing constructions.

Advantages / Benefits

- Versatile options for wall, floor and ceiling installation.
- Specially synchronized connection parts allow for assembly of simple, safe and versatile load bearing constructions.
- Simple cutting and installation due to stamped grid dimensions on the rail side.

TECHNICAL DATA

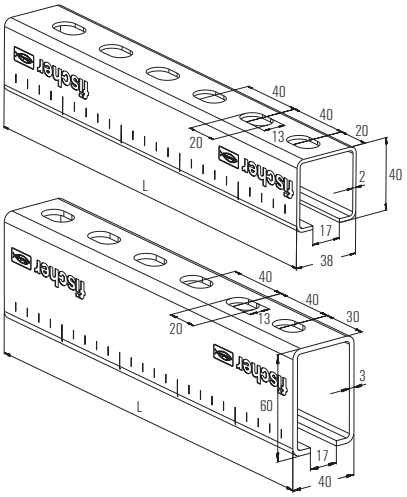

Type		Qty. per box	Length L	Profile cross section	Weight
		pcs.	[mm]	[cm²]	[kg/m]
MS 38/40/2.00 - 2 m	**079562**	1	2000	2.55	2.00
MS 38/40/2.00 - 3 m	**079559**	1	3000	2.55	2.00
MS 38/40/2.00 - 4 m	**093281**	1	4000	2.55	2.00
MS 38/40/2.00 - 6 m	**030075**	1	6000	2.55	2.00
MS 40/60/3.00 - 4 m	**093282**	1	4000	4.98	3.91
MS 40/60/3.00 - 6 m	**014314**	1	6000	4.98	3.91

INSTALLATION

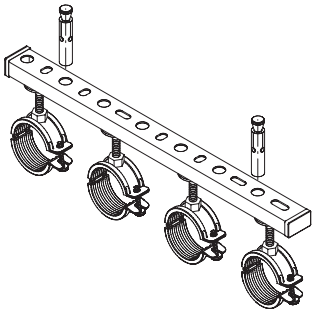

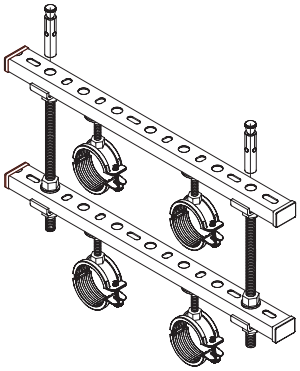

LOADS

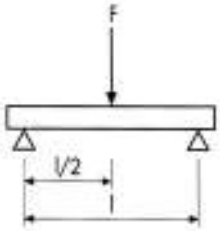

Type		Span l		
		1.0 m	2.0 m	3.0 m
MS 38/40/2.00	Max. rec. static load F [kN]	1.53	0.68	0.3
MS 40/60/3.00	Max. rec. static load F [kN]	4.21	2.10	1.21

Load-bearing capacity of MS channels

TECHNICAL VALUES

Profile	Profile weight	Profile cross section	Moment of inertia		Section modulus	
		A	I_y	I_z	W_y	W_z
	[kg/m]	[cm²]	[cm⁴]	[cm⁴]	[cm³]	[cm³]
Channel MS						
38/40	2.00	2.55	5.39	6.18	2.40	3.25
40/60	3.91	4.98	21.56	13.54	6.58	6.77

LOAD CASE 1

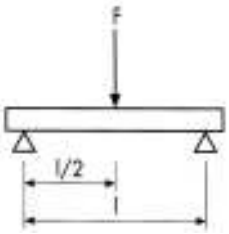

LOAD CASE 2

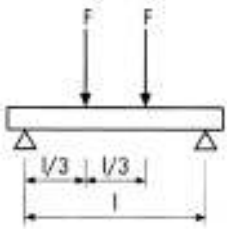

LOAD CASE 3

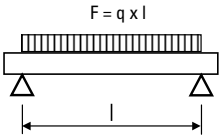

MS 38/40

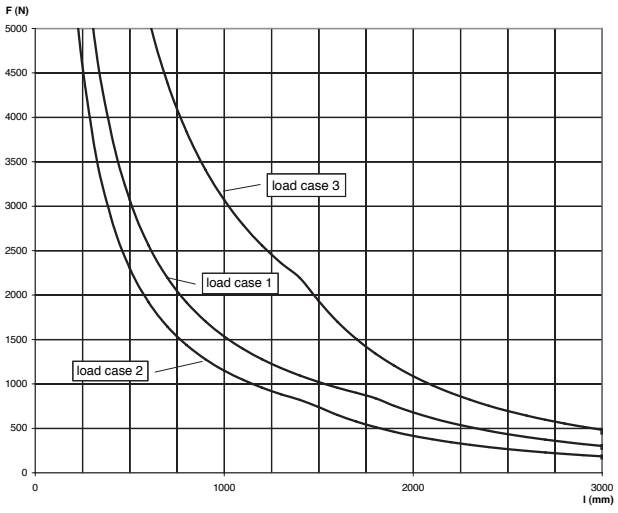

MS 40/60

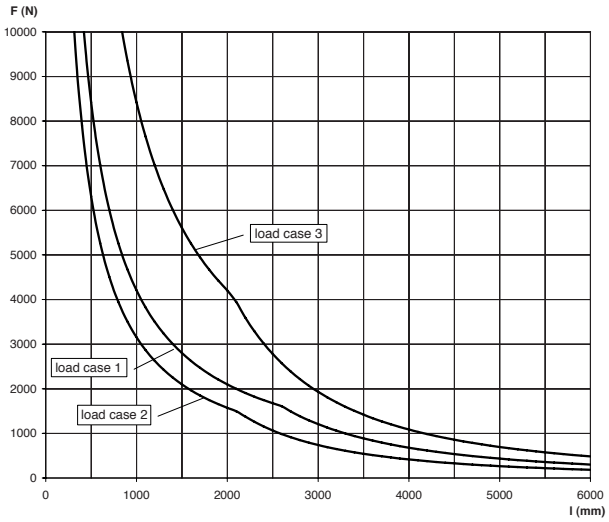

For the load curves, the permissible steel strain $\sigma_{adm.}$ = 160 N/mm and the maximum deflection under load l/200 are not exceeded.

Fixings and screw fastenings must be calculated accordingly.

Cantilever arm ALK / ALK Q

OVERVIEW

ALK

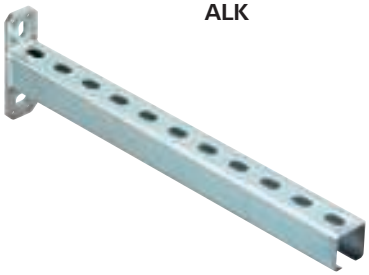

Properties:

Material	Base plate: steel DC01 (material no. 1.0330) acc. to DIN EN 10111 Channel: steel S235JR (material no 1.0037) acc. DIN EN 10025
Zinc plating	Electro zinc plated, min. 13 µm

DESCRIPTION

- Cantilever arms made of C profiled channels.

Advantages / Benefits

- Versatile usage possibilities for stepped lengths.
- Slots in the rail offer versatile installation possibilities.

INSTALLATION

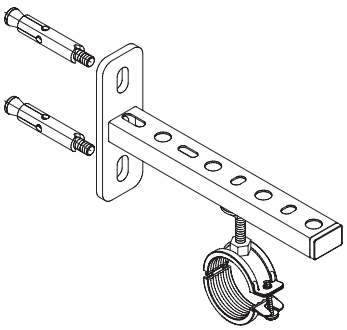

TECHNICAL DATA

ALK 38/40

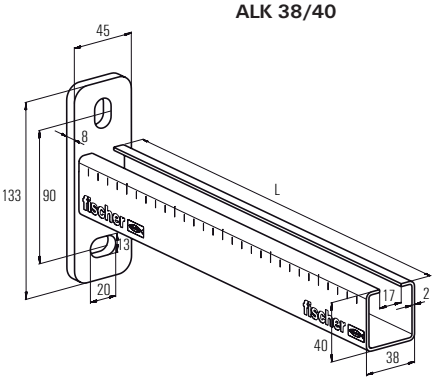

ALK 40/60

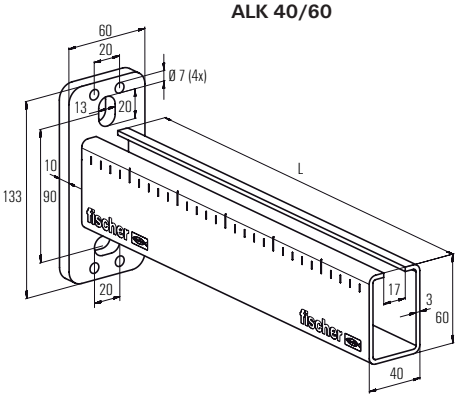

ALK Q 38/40

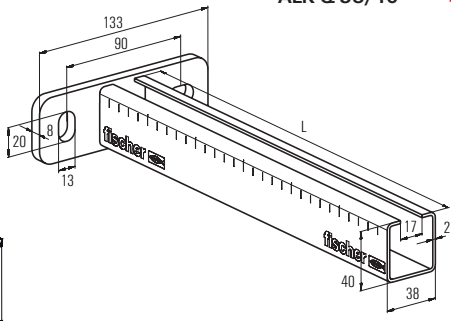

Type	Art. No.	Qty. per box pcs.	Profile	Length L [mm]
ALK 38/40 - 200	**079580**	10	38/40	200
ALK 38/40 - 360	**079581**	10	38/40	360
ALK 38/40 - 440	**063560**	10	38/40	440
ALK 38/40 - 520	**079582**	10	38/40	520
ALK 38/40 - 600	**020929**	10	38/40	600
ALK 38/40 - 800	**040399**	1	38/40	800
ALK 38/40 - 1000	**040400**	1	38/40	1000
ALK 40/60 - 600	**063561**	5	40/60	600
ALK 40/60 - 800	**063562**	1	40/60	800
ALK 40/60 - 1000	**063563**	1	40/60	1000
ALK Q 38/40 - 440	**040401**	10	38/40	440
ALK Q 38/40 - 600	**040402**	10	38/40	600

Load-bearing capacity of cantilever arm ALK / ALK Q

LOAD CASE 1

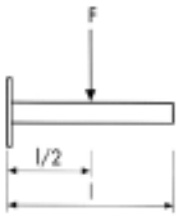

LOAD CASE 2

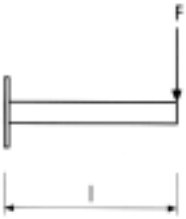

LOAD CASE 3

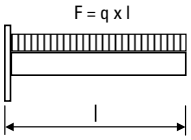

ALK 38/40

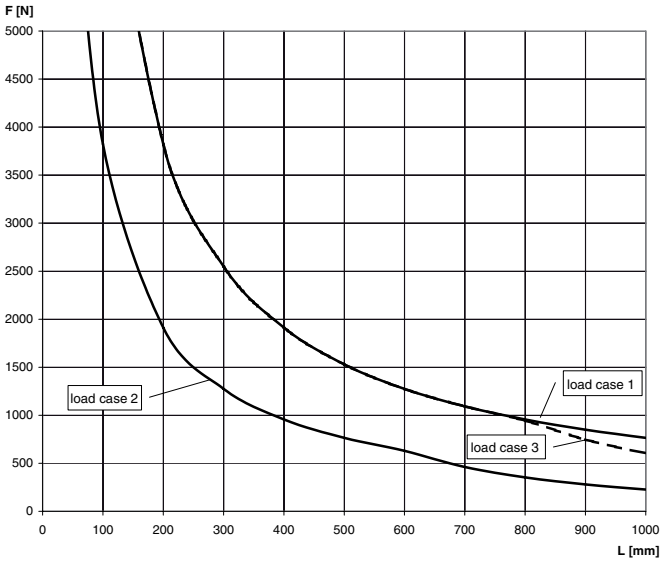

ALK 40/60

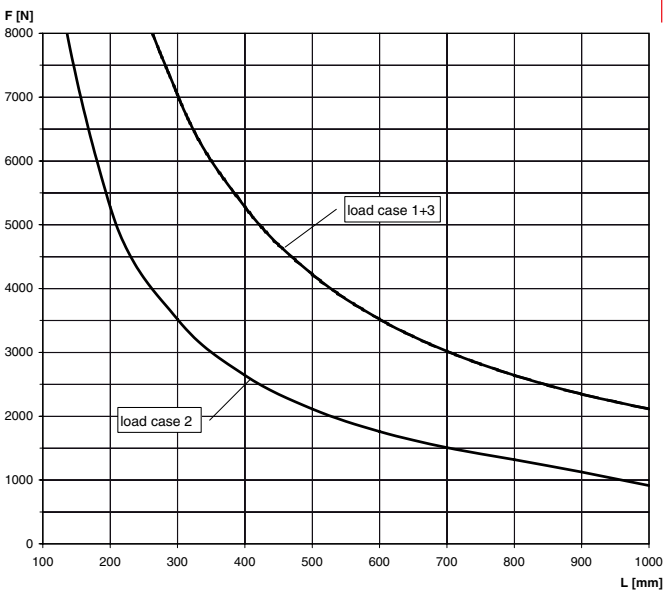

For the load curves, the permissible steel strain $\sigma_{adm.}$ = 160 N/mm and the maximum deflection under load l/150 are not exceeded.

Fixings and screw fastenings must be calculated accordingly.

Cover cap AK

OVERVIEW

AK

Type	Art. No.	Qty. per box pcs.	For profile
AK 38/40	**079567**	50	38/40
AK 40/60	**048841**	25	40/60 + 40/120

Properties:

Material	Polyethylene, black

Channel connector SV

OVERVIEW

SV 40

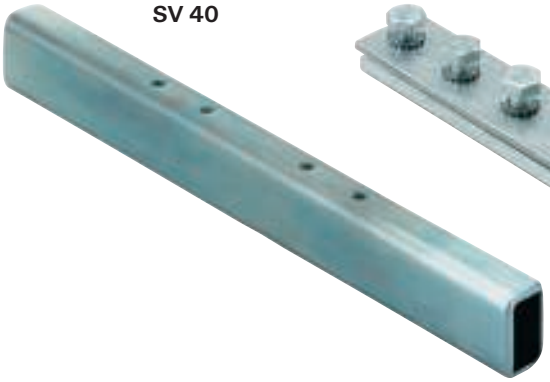

SV 38

Properties:

Material SV 38	Steel DC01 (material no. 1.0330) acc. to DIN EN 10130
Material SV 40	S235JR (material no. 1.0037) acc. to DIN EN 10025
Zinc plating	Electro zinc plated, 5 µm

INSTALLATION

The channel connector SV 38 is inserted into the rail ends and then screwed tight.

The channel connector SV 40 is introduced into the rails to be connected (MS 40/60 or MS 40/120) and then secured and screwed together using 4 location clamps HK 40.

DESCRIPTION

- Connectors for C-channels.

Advantages / Benefits

- SV 38 pre-assembled with screws and washers (special).

Installation tips

- HK 40 and SKS 10 x 20 and U 10 x 28 are not included.

TECHNICAL DATA

SV 38

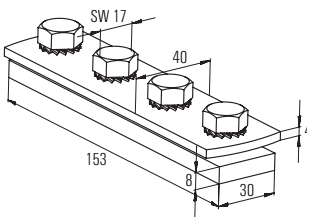

SV 40

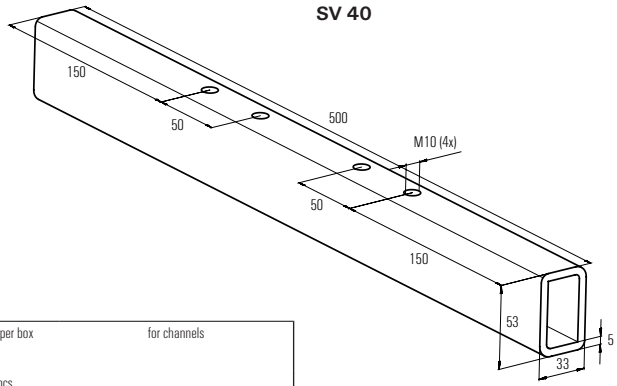

Type	Art. No.	Qty. per box pcs.	for channels
SV 38	**079661**	10	38/40
SV 40	**063643**	1	40/60 + 40/120

Sliding insert GLK 38

Codes and characteristics see on page 113

Rubber inlay EMS

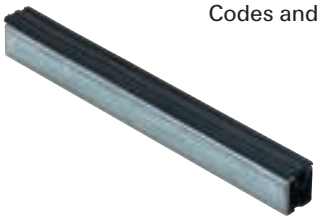

Codes and characteristics see on page 123

Universal mounting UHRS

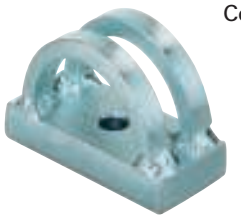

Codes and characteristics see on page 89

Variable bracket VB

Codes and characteristics see on page 90

Threaded rod bracket FSB 45°

Codes and characteristics see on page 92

T-head bolt FHS Clix S

OVERVIEW

FHS Clix-S

Properties:

Material	Steel DD11 (material no. 1.0332) acc. to DIN EN 10111
Zinc plating	Electro zinc plated, min. 5 µm

DESCRIPTION

- Quick lock hammer head bolt.

Advantages / Benefits

- Simple, fast and effective installation.
- Retrofitting in rails possible.
- Simple alignment in the rail.
- Fits to FUS and MS channels as well.

INSTALLATION

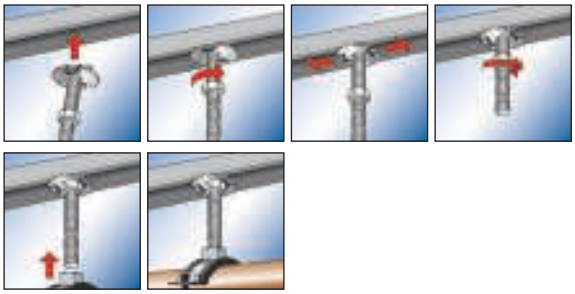

TECHNICAL DATA

FHS Clix-S

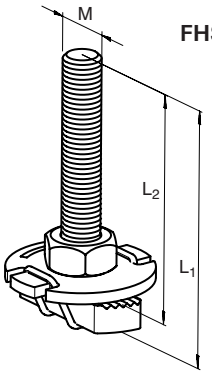

Type	Art. No.	Qty. per box	Thread M	Length L_1	Length L_2
		pcs.		[mm]	[mm]
FHS CLIX S 8 x 30	**020914**	50	M 8	36	30
FHS CLIX S 8 x 40	**020915**	50	M 8	46	40
FHS CLIX S 8 x 60	**020916**	50	M 8	66	60
FHS CLIX S 10 x 30	**020917**	50	M 10	37	30
FHS CLIX S 10 x 40	**020918**	50	M 10	47	40
FHS CLIX S 10 x 60	**020919**	50	M 10	67	60
FHS CLIX S 12 x 30	**020969**	50	M 12	38	30
FHS CLIX S 12 x 40	**047316**	50	M 12	48	40
FHS CLIX S 12 x 60	**504320**	50	M 12	68	60

LOADS

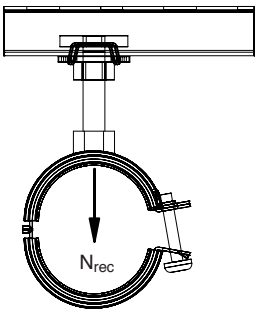

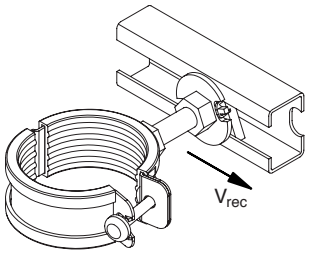

Type	Profile	Max. recom. static load (tension) N_{rec} [kN]	Max. recom. static load (shear) V_{rec} [kN]	Thightening torque [Nm]
M8	38/40	5.0	0.8	15
	40/60	6.5	0.8	
M10	38/40	5.0	2.0	20
	40/60	7.5	2.0	
M12	38/40	5.0	2.5	25
	40/60	8.5	2.5	

T-head bolt HS 38

OVERVIEW

HS 38

Properties:

Material	Channel nut / washer: Steel S235 JR (material no. 1.0037) acc. DIN EN 10025 Thread rod: Steel 4.8 acc. DIN 976 Hexagon nut: Steel acc. to ISO 898-2 table 4, resistance min. 4
Zinc plating	Electro zinc plated, min. 5 µm

DESCRIPTION

- T-head bolt for all standard rail profiles with 15 mm and 17 mm slot width.

Advantages / Benefits

- Simple, fast and effective installation.
- Fewer individual parts than with traditional fixings.
- Simple alignment in the rail.

INSTALLATION

Installation tips

- Introduce the fischer T-head bolt into the rail or bracket from the side.
- After alignment, the T-head bolt should be secured with the nut.

TECHNICAL DATA

HS 38

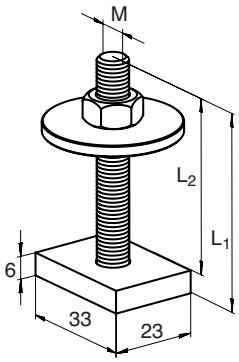

Type	Art. No.	Qty. per box	Thread	Length	Length
			M	L_1	L_2
		pcs.		[mm]	[mm]
HS 38 M 8 x 30	**079610**	50	M 8	30	24
HS 38 M 8 x 40	**079611**	50	M 8	40	34
HS 38 M 8 x 60	**079612**	50	M 8	60	54
HS 38 M 10 x 25	**063956**	50	M 10	25	19
HS 38 M 10 x 30	**079615**	50	M 10	30	24
HS 38 M 10 x 40	**079616**	50	M 10	40	34
HS 38 M 10 x 60	**079617**	50	M 10	60	54

LOADS

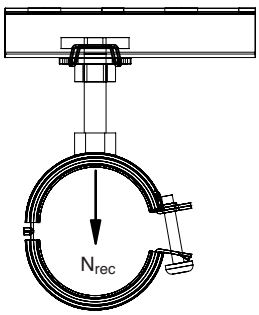

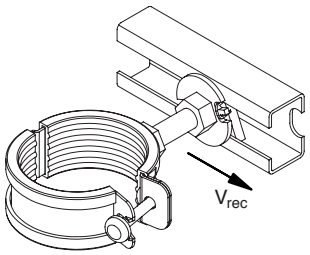

Type	Profile	Max. recom. static load (tension) N_{rec} [kN]	Max. recom. static load (shear) V_{rec} [kN]	Thightening torque [Nm]
HS 38 M8	38/40	6.0	0.8	15.0
	40/60	7.5	0.8	
HS 38 M10	38/40	6.0	1.0	25.0
	40/60	7.5	1.0	

Sliding nut SM

OVERVIEW

SM

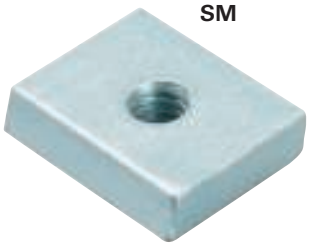

Properties:

Material	Steel S235 JR (material no. 1.0037) acc. to DIN EN 10025
Zinc plating	Electro zinc plated, min. 5 µm

DESCRIPTION

- Threaded plate fitting to MS channels.

Advantages / Benefits

- Simple installation and alignment in the rail.

INSTALLATION

Installation tip

- After alignment, the threaded plate should be secured with a nut.

TECHNICAL DATA

SM

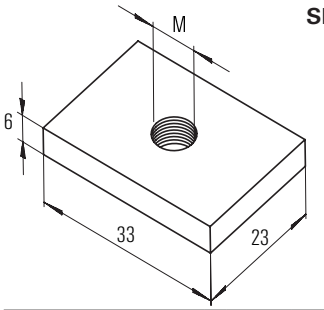

Type	Art. No.	Qty. per box	Thread M
		pcs.	
SM 38 M 8	**079600**	50	M 8
SM 38 M 10	**079601**	50	M 10

LOADS

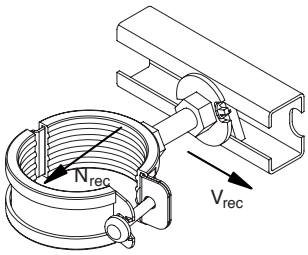

Type	Profile	Max. recom. static load (tension) N_{rec} [kN]	Max. recom. static load (shear) V_{rec} [kN]	Thightening torque [Nm]
SM 38 M8	38/40	6.0	0.8	15.0
	40/60	7.5	0.8	15.0
SM 38 M10	38/40	6.0	1.0	25.0
	40/60	7.5	1.0	25.0

Channel nut HG 38

OVERVIEW

HG 38

Properties:

Material	Steel S235 JR (material no. 1.0037) acc. to DIN EN 10025
Zinc plating	Electro zinc plated, min. 5 µm

DESCRIPTION

- Threaded plate fitting to MS channels.

Advantages / Benefits

- Simple installation.
- Retrofitting in rails possible.

INSTALLATION

Installation tip

- Insert in to the channel and rotate 90°.

TECHNICAL DATA

HG 38

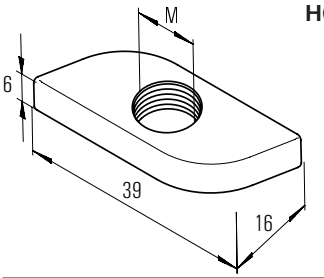

Type	Art. No.	Qty. per box pcs.	Thread M
HG 38 M 6	**077667**	100	M 6
HG 38 M 8	**024687**	100	M 8
HG 38 M 10	**024688**	100	M 10

LOADS

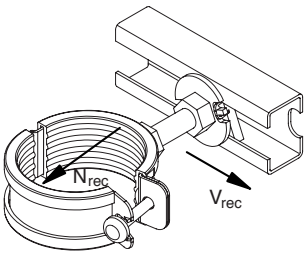

Type	Profile	Max. recom. static load (tension) N_{rec} [kN]	Max. recom. static load (shear) V_{rec} [kN]	Thightening torque [Nm]
HG 38 M6	38/40	3.5	0.5	5.0
	40/60	5.5	0.5	
HG 38 M8	38/40	3.5	0.7	10.0
	40/60	5.5	0.7	
HG 38 M10	38/40	3.5	0.8	15.0
	40/60	5.5	0.8	

Channel washer HK

OVERVIEW

HK

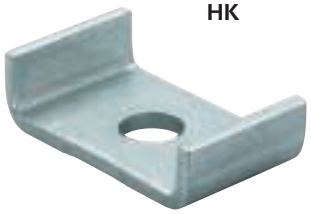

Properties:

Material	Steel S235 JR (material no. 1.0037) acc. to DIN EN 10025
Zinc plating	Electro zinc plated, min. 5 µm

DESCRIPTION

- The channel washer can be used for proper fastening with a fixing, e.g. fischer anchor bolt.
- Used to secure connections.

Advantages / Benefits

- Prevents the rail from deformation.

INSTALLATION

TECHNICAL DATA

HK 38

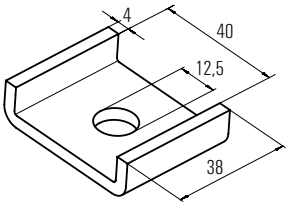

HK 40

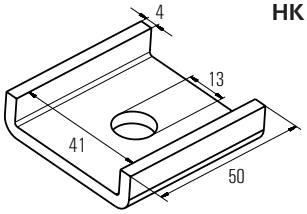

Type	Art. No.	Qty. per box	for profile
		pcs.	
HK 38	**079651**	50	38/40
HK 40	**020946**	100	40/60; 40/120

Saddle flange SF

OVERVIEW

SF Q

SF L

Properties:

Material	Steel DC01 – min. 340 (material no. 1.0037) acc. to DIN EN 10139
Zinc plating	Electro zinc plated, min. 8 µm

DESCRIPTION

- Connection element between the fischer channels and building.

Advantages / Benefits

- Solid connecting element for load-bearing constructions.
- Simple installation by inserting the mounting rail in the saddle.

INSTALLATION

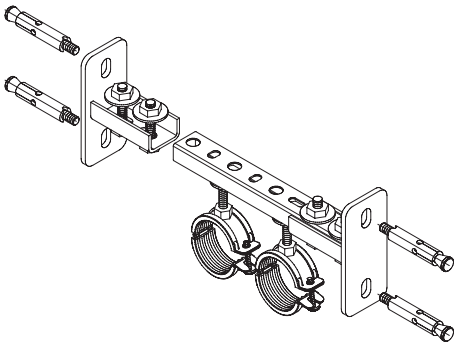

TECHNICAL DATA

SF Q

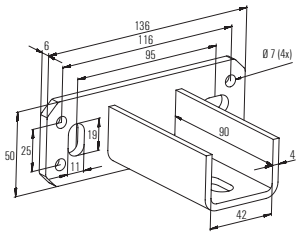

SF L

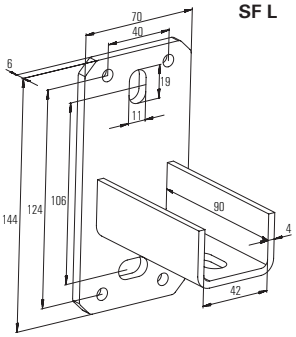

Type	Art. No.	Qty. per box	Version
		pcs.	
SF Q 38	**079410**	10	horizontal
SF L 38	**079586**	8	vertical

LOADS

support on both sides

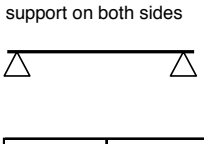

Connector	Channel	double	Torque
		[kN]	[Nm]
HG 38 M10	38/40	1,5	15
	40/--	1,5	15
SM / HS M10	38/40	2	25
	40/--	2	25
FHS Clix S 10	38/40	4	20
	40/--	4	20

Telescopic flange TSF

OVERVIEW

TSF Q

TSF L

Properties:

Material	Base plate: Steel DD11 (material no. 1.0332) acc. to DIN EN 10111 / U-Profil: S235JR (material no. 1.0037) acc. to DIN EN 10025
Zinc plating	Electro zinc plated, min. 3 µm

DESCRIPTION

- Ideal, flexible connecting element for producing constructions in connection with the fischer mounting rails.

Advantages / Benefits

- Simple and fast installation using the T-head bolt FHS Clix S.
- Height and length differences up to 5 cm can be compensated quickly and easily.
- Can be used ideally in tight application areas using telescopic function.
- Free rail opening, e.g. for pipe connections.

INSTALLATION

Installation tips

- Installation is carried out by sliding into the mounting rail and the fastening by means of FHS Clix S or by screwing.
- Good fixing possibility using suitable anchor.
- Good height adjustment due to long slots in the base plate.

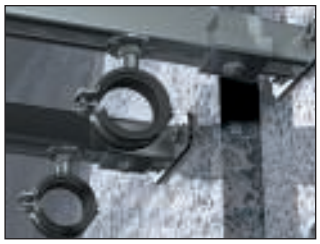

TECHNICAL DATA

TSF L 38/40

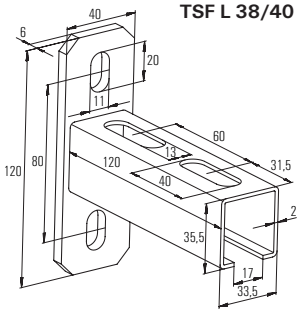

TSF L 40/60

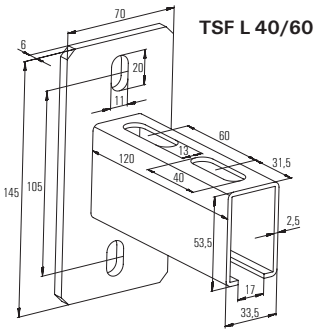

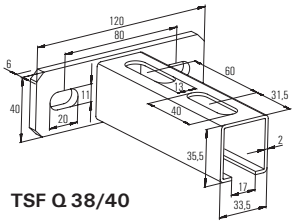

TSF Q 38/40

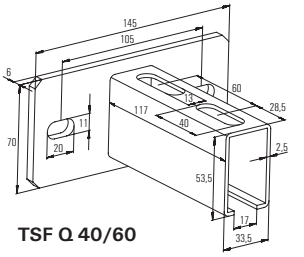

TSF Q 40/60

Type	Art. No.	Qty. per box pcs.	for profile	Version
TSF L 38/40	**063611**	15	38/40	vertical
TSF Q 38/40	**063621**	15	38/40	horizontal
TSF L 40/60	**063624**	15	40/60 + 40/120	vertical
TSF Q 40/60	**063629**	15	40/60 + 40/120	horizontal

LOADS

support on both sides

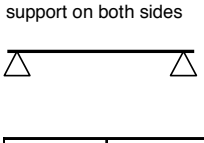

Connector	Channel	double [kN]	Torque [Nm]
HG 38 M10	38/40	1,5	15
	40/--	1,5	15
SM / HS M10	38/40	2	25
	40/--	2	25
FHS Clix S 10	38/40	4	20
	40/--	4	20

Installation angle bracket MW

OVERVIEW

MW 38-45°

MW L2 38-90°

MW 38-90°

MW L3 38-90°

Properties:

Material	Steel S235 JR (material no. 1.0332) acc. to DIN EN 10025
Zinc plating	Electro zinc plated, min. 8 µm

INSTALLATION

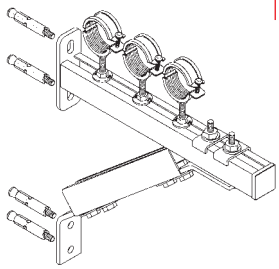

DESCRIPTION

- Angle brackets for connection of channels.

Advantages / Benefits

- Installation advantages in producing load-bearing constructions in connection with fischer mounting rails.
- Variable installation possibilities.
- MW 38-45° is supplied with pre-mounted clamping screw.

TECHNICAL DATA

MW 38-45°

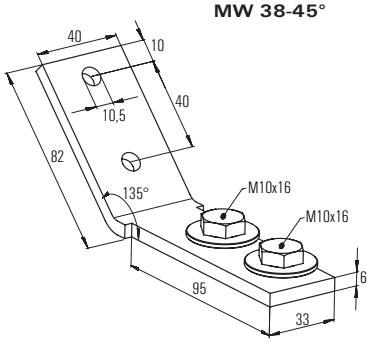

MW L2 38-90°

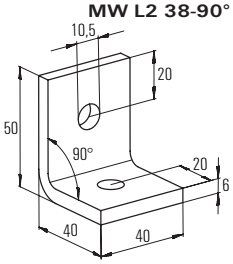

MW 38-90°

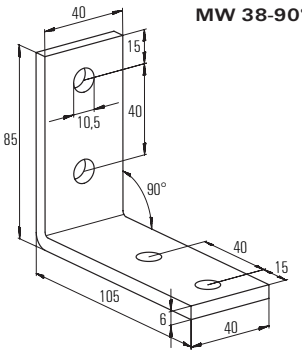

MW L3 38-90°

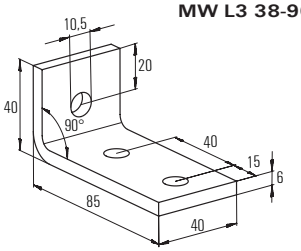

Type	Art. No.	Qty. per box pcs.	Angle		
MW 38-45°	**079658**	10	45°		
MW 38-90°	**079657**	20	90°		
MW L2 38-90°	**063599**	20	90°		
MW L3 38-90°	**063597**	20	90°		

LOADS

MW L2, MW L3, MW 38-90

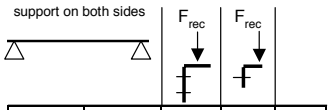

Connector	Channel	double [kN]	single [kN]	Torque [Nm]
HG 38	38/40	1,5	0,8	15
M10	40/--	1,5	0,8	15
SM / HS	38/40	2	1	25
M10	40/--	2	1	25
FHS	38/40	4	2	20
Clix S 10	40/--	4	2	20

Load case: Brackets made of MS 38/40 + MW 38–45° + MW 38–90°

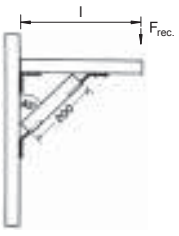

Length l in mm	140	280	
Max. Load $F_{rec.}$ in kN:	3.9	1.7	

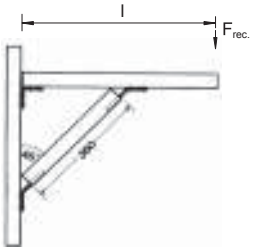

Length l in mm	125	250	470
Max. Load $F_{rec.}$ in kN:	2.4	3.9	1.4

Universal bracket UW S

OVERVIEW

UW S

Properties:

Material	Steel DD11 (material no. 10332) acc. to DIN EN 10111
Zinc plating	Electro zinc plated, min. 5 µm

DESCRIPTION

- Stable angle bracket for reinforcing load-bearing constructions.

Advantages / Benefits

- Ideal, flexible construction element due to the option of horizontal and vertical alignment.
- In combination with fischer mounting rails, the universal bracket produces a load-bearing construction with very high stability and safety.

INSTALLATION

Installation tip

- The universal bracket should be used in pairs.

TECHNICAL DATA

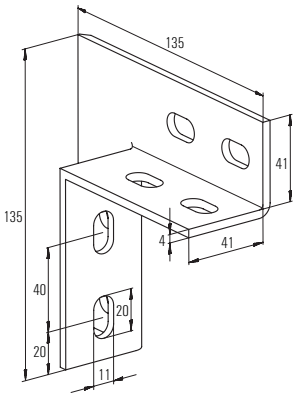

Type	Art. No.	Qty. per box pcs.
UW S	**49479**	10

LOADS

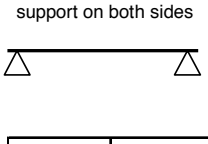

Connector	Channel	double [kN]	single [kN]	Torque [Nm]
HG 38	38/40	1,5	0,8	15
M10	40/--	1,5	0,8	15
SM / HS	38/40	2	1	25
M10	40/--	2	1	25
FHS	38/40	4	2	20
Clix S 10	40/--	4	2	20

Angle bracket WK

OVERVIEW

WK 100/100

WK 200/200

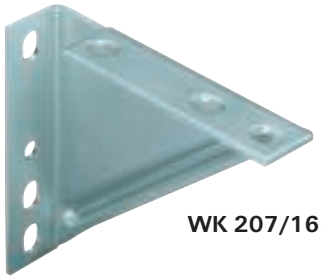

WK 207/165

Properties:

Material	Steel DD11 (material no. 1.0332) acc. to DIN EN 10111
Zinc plating	Electro zinc plated, min. 8 µm

DESCRIPTION

- Stable angle bracket for fixing pipe lines and components.
- The angle bracket acts as a reinforcement for load-bearing consructions.

Advantages / Benefits

- Versatile possibilities for wall, floor and ceiling installation, can be used in shafts and also free-standing.
- In combination with fischer mounting rails, the universal bracket produces a load-bearing construction with very high stability and safety.

INSTALLATION

TECHNICAL DATA

WK 100/100

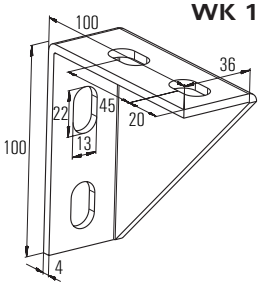

WK 200/200

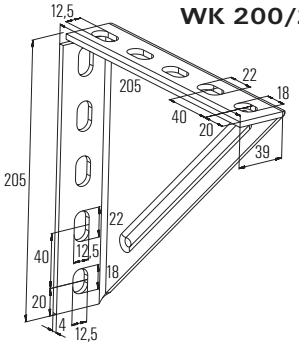

WK 207/165

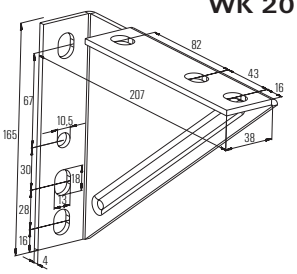

Type	Art. No.	Qty. per box pcs.
WK 100/100	**63559**	5
WK 200/200	**79570**	5
WK 207/165	**79571**	6

Load-bearing capacity of the angle brackets

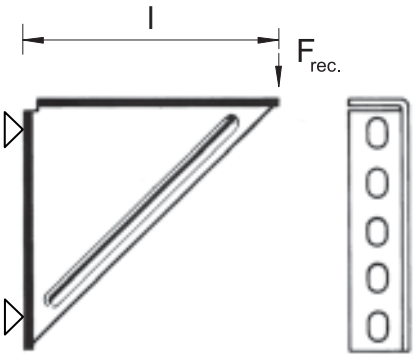

ANGLE BRACKET WK

Angle bracket WK 100

Length l in mm		80	
Max. recom. static load in kN:		4.0	

Angle bracket WK 200/200

Length l in mm		100	180
Max. recom. static load $F_{rec.}$ in kN:		4.0	1.8

Angle bracket WK 207/160

Length l in mm			150
Max. recom. static load $F_{rec.}$ in kN:			1.8

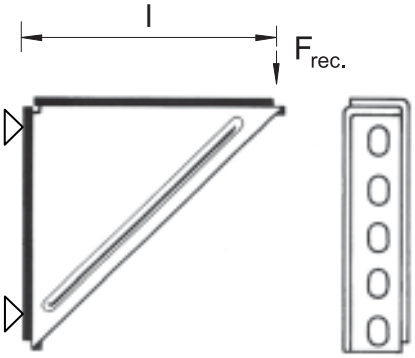

ANGLE BRACKET WK, DOUBLE-MOUNTED

Angle bracket WK 200/200. double-mounted

Length l in mm		100	180
Max. recom. static load $F_{rec.}$ in kN:		8.0	6.0

Rail hanger SB

OVERVIEW

Properties:

Material	S355 MC (material no. 1.0976) acc. to DIN EN 10149 Alternatively: DD11 (material no. 1.0332) acc. to EN 10111
Zinc plating	Electro zinc plated, min. 8 µm

DESCRIPTION

- Universal crosswise connection for channels.

Advantages / Benefits

- Static connection without rotation.
- Variable installation possible due to hole pattern.

TECHNICAL DATA

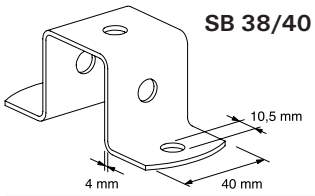

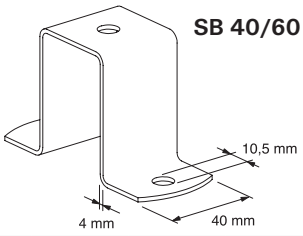

Type	Art. No.	Qty. per box	for profile
		pcs.	
SB 38/40	**20926**	25	38/40
SB 40/60	**20927**	25	40/60

Beam clamp TKR

OVERVIEW

TKR

Properties:

Material	Plate / U-bolt pipe hanger: Steel S235 JR (material no. 1.0037) acc. DIN EN 10025 Hexagon nut: Steel acc. ISO 898-2 resistance min. 4
Zinc plating	Electro zinc plated, min. 5 µm

DESCRIPTION

- Stirrup for fastening profile rails to steel beams.

Advantages / Benefits

- Easy to add on.
- No drilling or welding necessary.
- Adjustment is possible at any time.
- Due to the different lengths of the claw sides, the fischer clamp support can be fastened to all standard T-beams.

INSTALLATION

- Two clamp supporters are necessary for fastening to the steel beam.

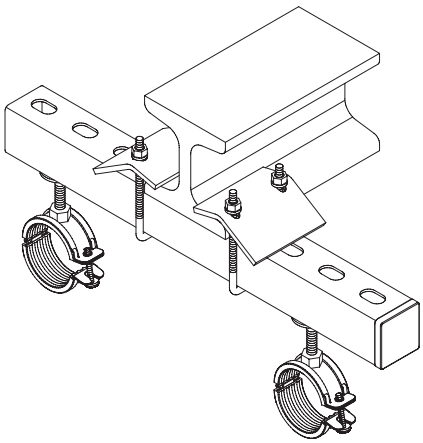

TECHNICAL DATA

TKR

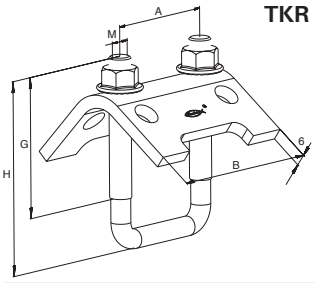

Type	Art. No.	Qty. per box	For profile MS	Width B	Height G	Height H	Thread M	Width A
		pcs.		[mm]	[mm]	[mm]	[mm]	[mm]
TKR 21-42	**504363**	20	38/40	79	48	97	8	52
TKR 82	**504366**	20	40/60	79	80	137	10	54
TKR 124	**504367**	10	40/120	79	80	179	10	54

LOADS

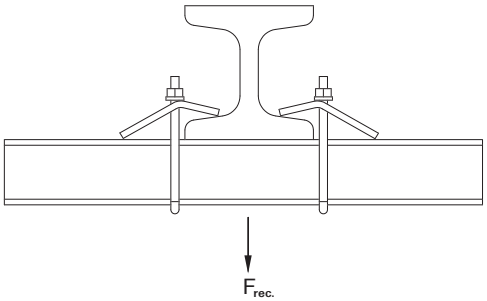

Type	Fits profile	Thread	Max. rec. static load	Tightening torque
			$F_{rec.}$ [kN]	[Nm]
TKR 21/42	38/40	M8	5.00	15
TKR 82	40/60	M10	10.00	20
TKR 124	40/120	M10	10.00	20

Installation System FUS

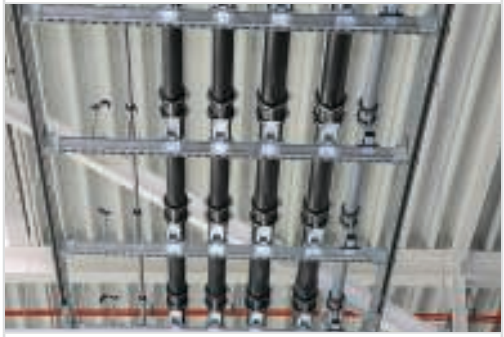

A complete installation system suitable for:

- industrial piping
- heating and sanitary supply pipes
- ventilation, air duct
- electrical installation, like cable trays, data lines etc.
- solar panels installations

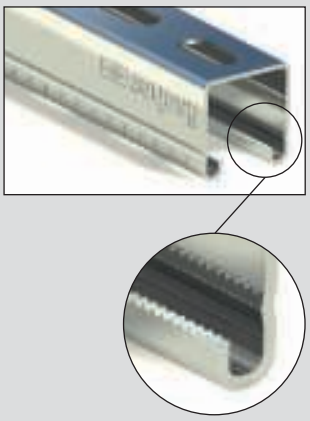

- The serration in the channel gives shear load benefits e.g. in vertical installation.

Channels
FUS 21, FUS 41, FUS 62 **Page 74**

Cantilever
FCA **Page 78**

Connectors
FCN Clix P **Page 82**

Channel connectors
SF **Page 86**

Channel connectors
VB **Page 90**

FUS 21 D, FUS 41 D, FUS 62 D **Page 74**

EMS 41 **Page 81**

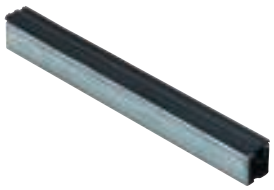

FEC **Page 81**

FCAM **Page 80**

FCN Clix M **Page 82**

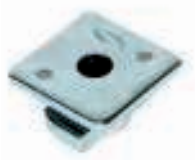

FHS Clix S **Page 83**

FCN **Page 84**

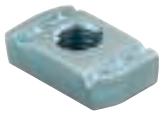

HK 41 **Page 85**

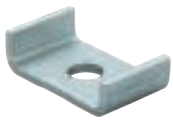

UWS **Page 87**

FAF **Page 94**

FUF **Page 95**

FFF **Page 93**

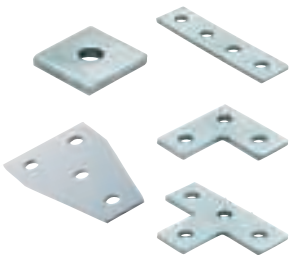

FSB 45° **Page 92**

UHRS **Page 89**

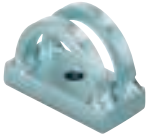

TKR **Page 91**

FUF OC **Page 81**

Channel FUS

OVERVIEW

FUS 21 FUS 41 FUS 62

FUS 21D FUS 41D FUS 62D

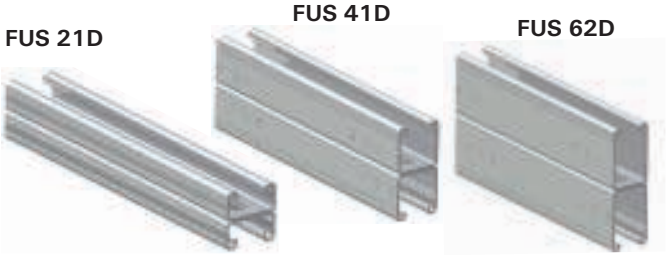

Properties:

Material	Steel S250 GD-C (material no. 1.0242+Z) acc. to DIN EN 1.0027-2
Zinc plating	Sendzimir zinc plated, approx. 20 µm

INSTALLATION

DESCRIPTION

- U-profiled channel for horizontal and vertical installation.
- Fast and streamlined fastening of pipe tracks and load-bearing constructions.

Advantages / Benefits

- High bending and tear-out strength due to optimized profile cross section.
- Serration in the rail for secure hold of channel nut FCN and FHS Clix S.
- Versatile options for wall, floor and ceiling installation.
- Simple cutting to size and installation due to the stamped grid dimension on the rail side.

TECHNICAL DATA

FUS 21

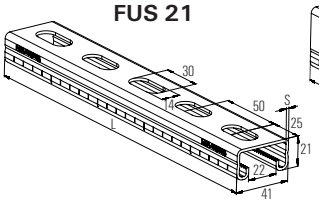

FUS 41

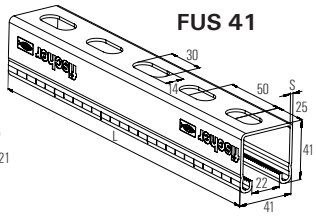

FUS 62

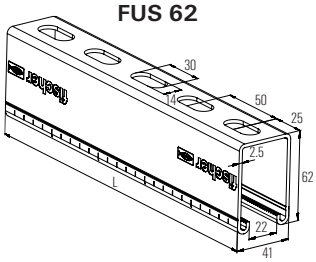

FUS 21D

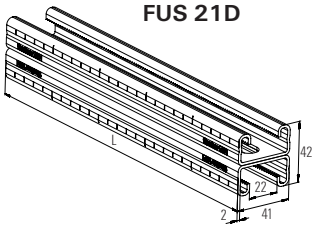

FUS 41D

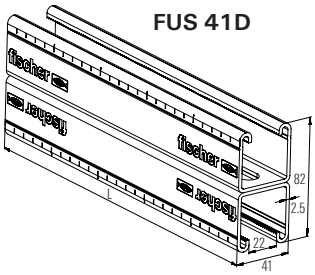

FUS 62D

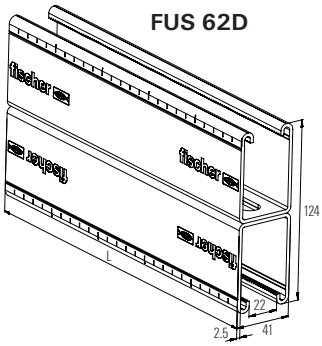

Type	Art. No.	Qty. per box	Length L	Thickness S	Weight
		pcs.	[m]	[mm]	[kg/m]
FUS 21/2.0 - 2 m	**40391**	1	2	2.0	1.44
FUS 21/2.0 - 3 m	**97660**	1	3	2.0	1.44
FUS 21/2.5 - 2 m	**92867**	1	2	2.5	1.67
FUS 21/2.5 - 3 m	**77349**	1	3	2.5	1.67
FUS 21/2.5 - 6 m	**77541**	1	6	2.5	1.67
FUS 41/2.0 - 2 m	**40390**	1	2	2.0	2.06
FUS 41/2.0 - 3 m	**97658**	1	3	2.0	2.06
FUS 41/2.0 - 6 m	**97659**	1	6	2.0	2.06
FUS 41/2.5 - 2 m	**92295**	1	2	2.5	2.45
FUS 41/2.5 - 3 m	**77347**	1	3	2.5	2.45
FUS 41/2.5 - 6 m	**77537**	1	6	2.5	2.45
FUS 62/2.5 - 6 m	**504457**	1	6	2.5	3.27
FUS 21D/2.0 - 3m	**504458**	1	3	2.0	2.87
FUS 41D/2.5 - 6m	**504459**	1	6	2.5	4.89
FUS 62D/2.5 - 6 m	**504460**	1	6	2.5	6.55

Technical data FUS

LOADS

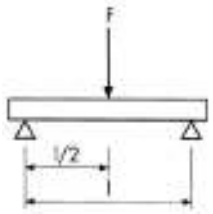

Type		Span l		
		1 m	2 m	3 m
FUS 21/2.0	Max. rec. static load F [kN]	0.49	0.12	0.05
FUS 21/2.5	Max. rec. static load F [kN]	0.52	0.13	0.06
FUS 41/2.0	Max. rec. static load F [kN]	1.65	0.67	0.30
FUS 41/2.5	Max. rec. static load F [kN]	1.82	0.76	0.34
FUS 62/2.5	Max. rec. static load F [kN]	3.59	1.79	0.99
FUS 21D/2.0	Max. rec. static load F [kN]	1.67	0.69	0.31
FUS 41D/2.5	Max. rec. static load F [kN]	5.60	2.79	1.85
FUS 62D/2.5	Max. rec. static load F [kN]	11.45	5.72	3.80

TECHNICAL VALUES FOR FISCHER CHANNELS

Profile 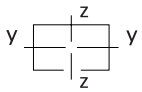	Profile weight	Profile cross section	Moment of inertia		Section modulus	
		Δ	I_y	I_z	W_y	W_z
	[kg/m]	[cm²]	[cm⁴]	[cm⁴]	[cm³]	[cm³]
FUS 21/2.0	1.44	1.72	0.97	4.66	0.89	2.27
FUS 21/2.5	1.67	1.99	1.03	5.28	0.93	2.58
FUS 41/2.0	2.06	2.52	5.33	7.69	2.58	3.75
FUS 41/2.5	2.45	3.00	6.00	8.99	2.85	4.38
FUS 62/2.5	3.27	4.05	17.70	12.90	5.62	6.29
FUS 21D/2.0	2.87	3.44	5.49	9.31	2.61	4.54
FUS 41D/2.5	4.89	6.00	35.01	17.90	8.76	8.78
FUS 62D/2.5	6.55	8.09	111.00	25.80	17.90	12.58

Technical data FUS

LOAD-BEARING CAPACITY OF CHANNELS

Load case 1

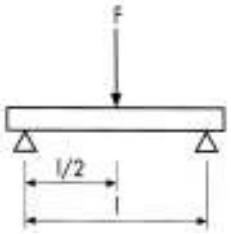

Load case 2

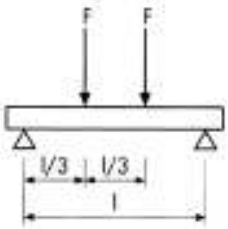

Load case 3

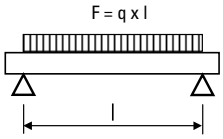

FUS 21/2.0

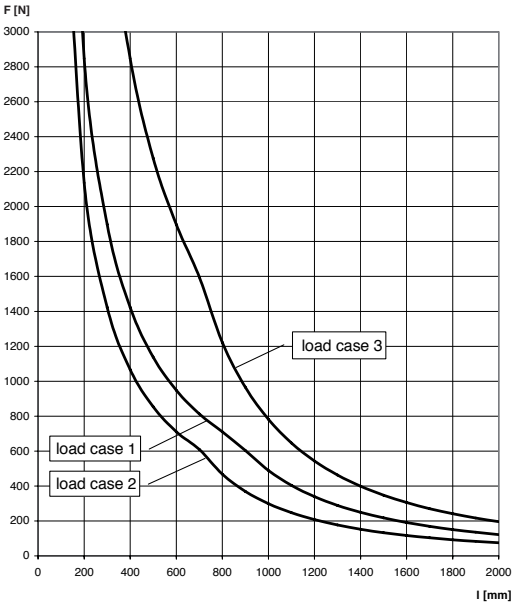

FUS 21/2.5

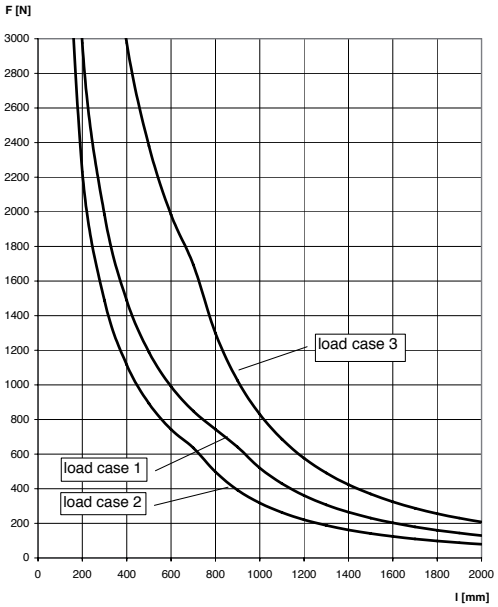

FUS 41/2.0

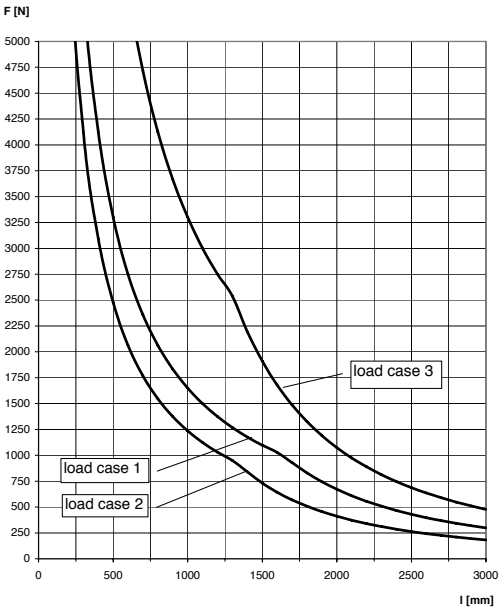

FUS 41/2.5

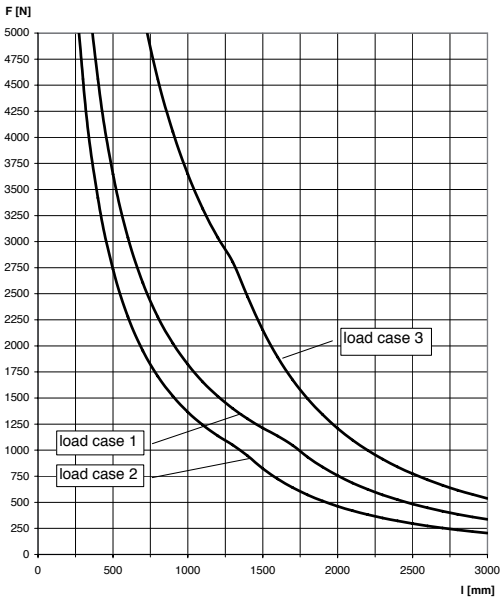

For the load curves, the permissible steel strain $\sigma_{adm.}$ = 160 N/mm and the maximum deflection under load l/200 are not exceeded.
Fixings and screw fastenings must be calculated accordingly.

LOAD-BEARING CAPACITY OF CHANNELS

FUS 62/2.5

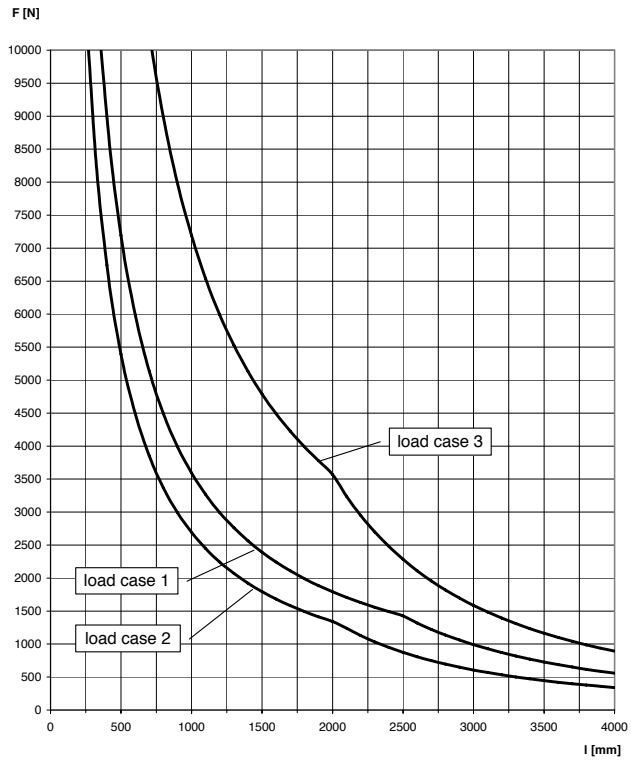

FUS 21D/2.0

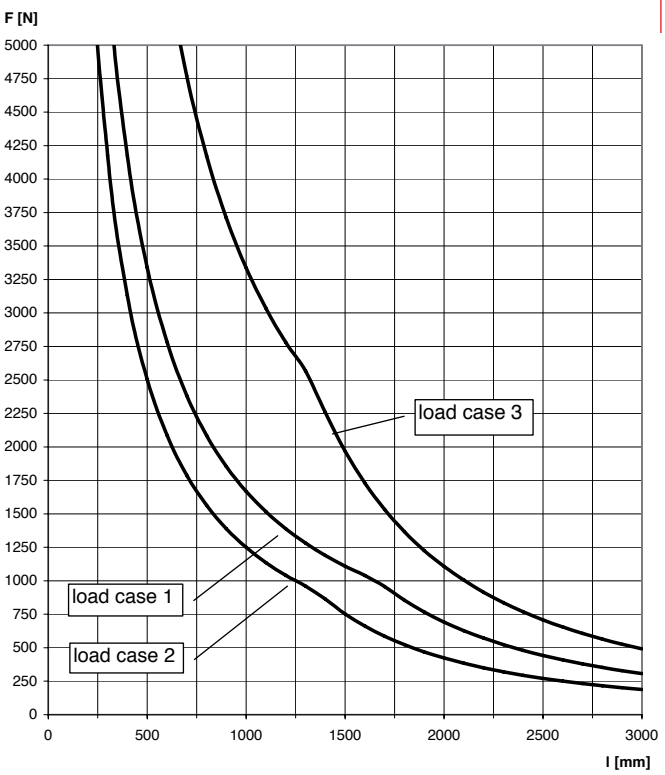

FUS 41D/2.5

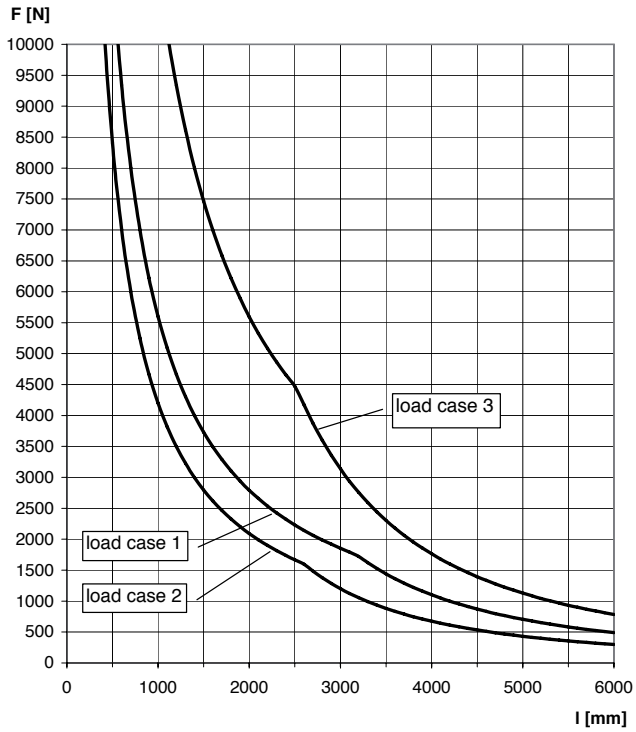

FUS 62D/2.5

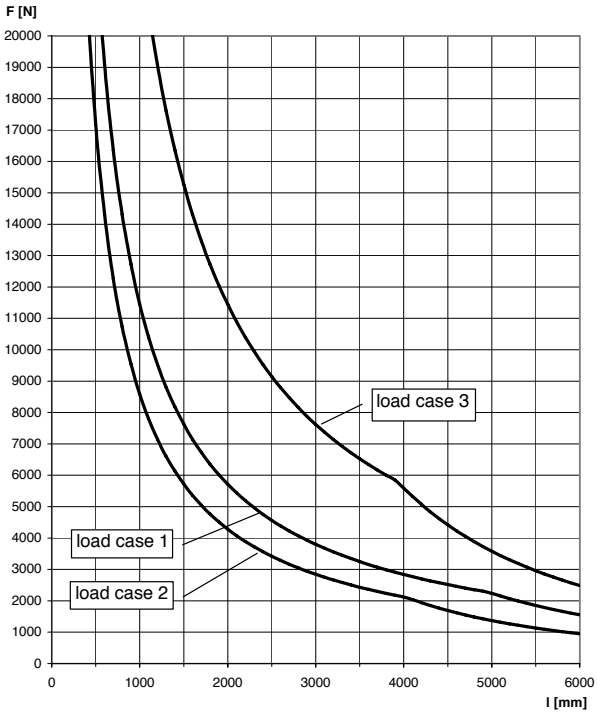

For the load curves, the permissible steel strain $\sigma_{adm.}$ = 160 N/mm and the maximum deflection under load l/200 are not exceeded.
Fixings and screw fastenings must be calculated accordingly.

Cantilever arm FCA

OVERVIEW

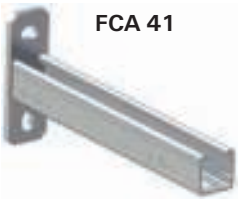

FCA 41

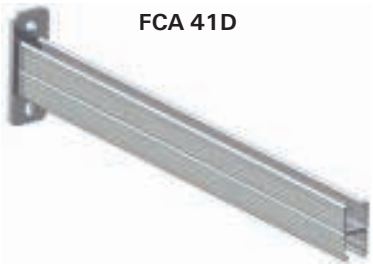

FCA 41D

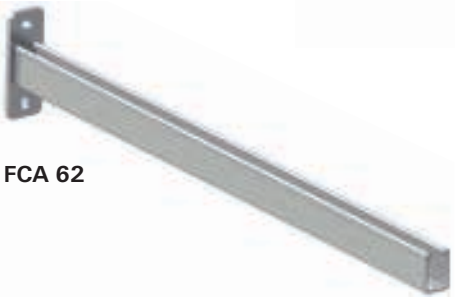

FCA 62

Properties:

Material	Base plate: Steel (material no. 1.0330), DC01 acc. DIN EN 10139 Channel: Steel S235 JR acc. DIN EN 10025, material no. 10037
Zinc plating	Electro zinc plated min. 13 µm

DESCRIPTION

- Cantilever arms made of U profiled channels.

Advantages / Benefits

- Serration for secure hold of channel nut FCN Clix and FHS Clix S.
- Robust base plate for load-bearing constructions.
- Versatile usage possibilities through stepped lengths.
- Long slots in the rail offer versatile installation possibilities.

INSTALLATION

TECHNICAL DATA

FCA 41

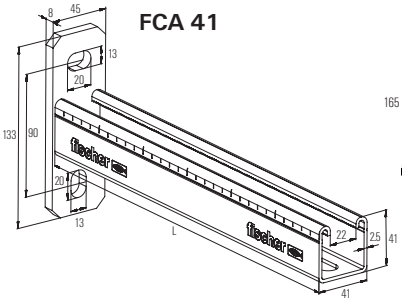

FCA 41D

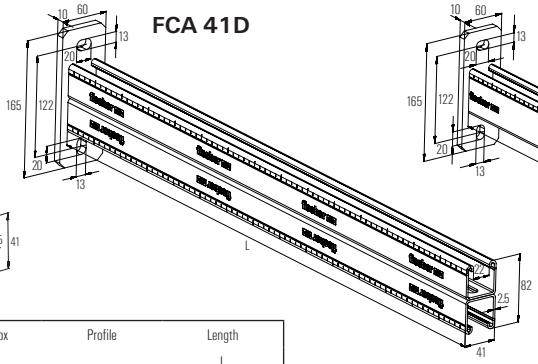

FCA 62

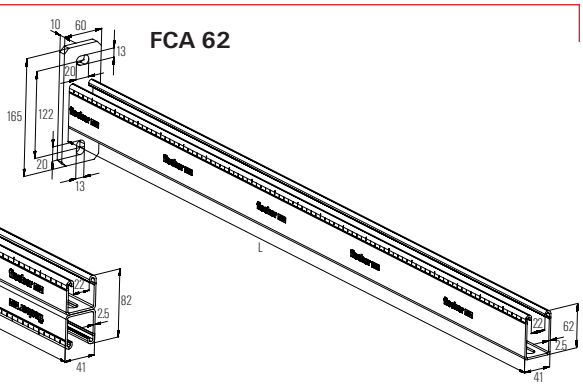

Type	Art. No.	Qty. per box pcs.	Profile	Length L [mm]
FCA 300	**077359**	1	41/2.5	300
FCA 450	**077361**	1	41/2.5	450
FCA 600	**077363**	1	41/2.5	600
FCA 750	**077365**	1	41/2.5	750
FCA 62-1000	**504315**	1	62/2.5	1000
FCA 41D 750	**504317**	1	41D/2.5	750
FCA 41D 1000	**504319**	1	41D/2.5	1000

Technical data FCA

LOAD-BEARING CAPACITY OF CANTILEVER BRACKETS

Load case 1

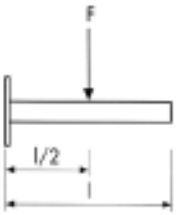

Load case 2

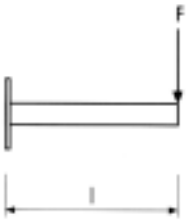

Load case 3

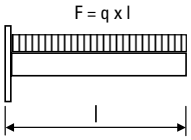

FCA 41

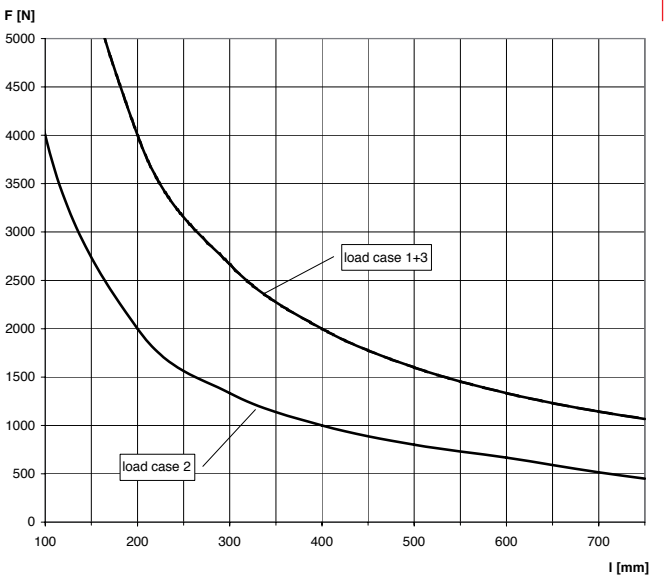

FCA 62

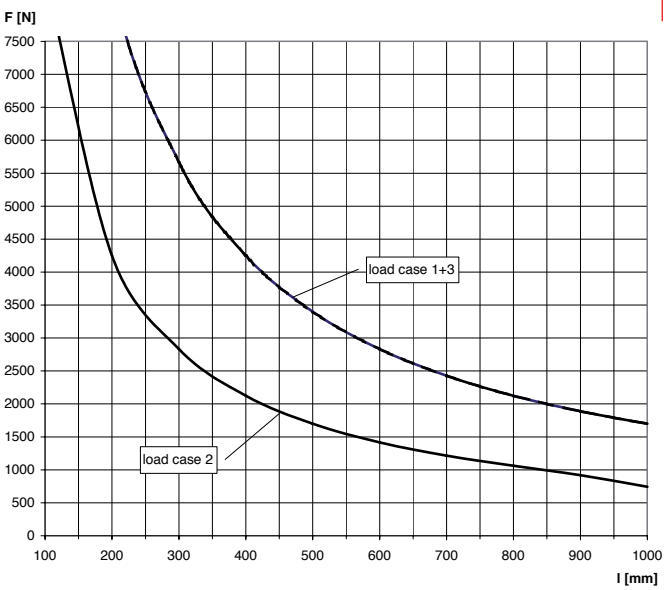

FCA 41 D

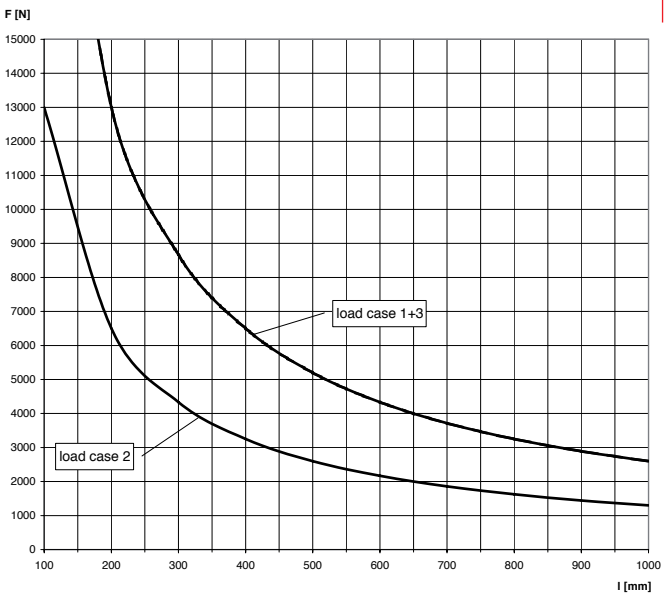

For the load curves, the permissible steel strain $\sigma_{adm.}$ = 160 N/mm and the maximum deflection under load l/150 are not exceeded. Fixings and screw fastenings must be calculated accordingly.

Massive Cantilever arm FCAM

OVERVIEW

FCAM

Properties:

Material	Steel DD11 (material no. 10332) acc. to DIN EN 10111
Zinc plating	Electro zinc plated, min. 13 µm

DESCRIPTION

- Massive cantilever as U profile with welded base-plate.
- Mainly for heavy pipe mounting directly to the wall but also for fixings and constructions to ceilings and floor areas.

Advantages / Benefits

- Robust base plate for load-bearing constructions.
- Slots in the rail offer versatile installation possibilities.

INSTALLATION

Installation tips

- Good fixing possibilities using suitable anchors.
- Long slots in the base plate offer good adjustment.
- Fastening FHS Clix S or FCN possible.

TECHNICAL DATA

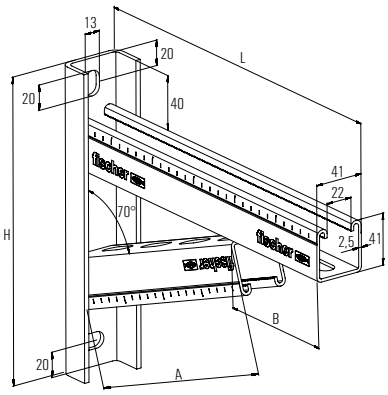

Type	Art. No.	Qty. per box	Profile	Length L	Height H	Length A	Length B
		pcs.		[mm]	[mm]	[mm]	[mm]
FCAM 300	**504477**	1	FUS 41	300	246	213	100
FCAM 400	**504479**	1	FUS 41	400	270	284	133
FCAM 500	**504480**	1	FUS 41	500	284	354	167
FCAM 600	**504482**	1	FUS 41	600	319	426	200
FCAM 700	**505460**	1	FUS 41	700	343	497	233

LOADS

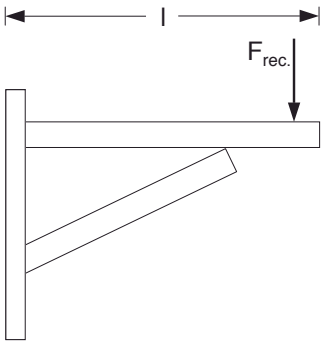

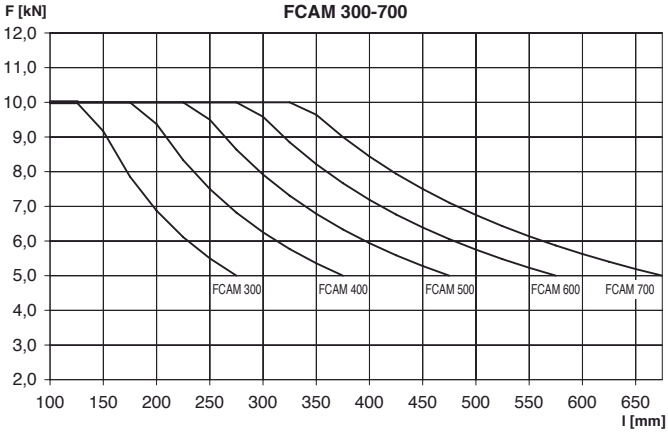

Fixings and screw fastenings must be calculated accordingly.

Cover cap FEC

OVERVIEW

FEC 21 B

FEC 41 B

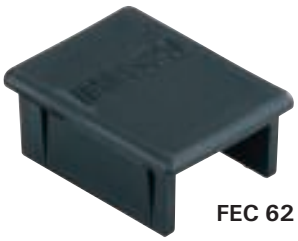

FEC 62 B

Properties:

Material	Polyethylene, black

TECHNICAL DATA

Type	Art. No.	Qty. per box pcs.
FEC 21 B	**077357**	100
FEC 41 B	**077355**	100
FEC 62 B	**505551**	100

Channel connector FUF

OVERVIEW

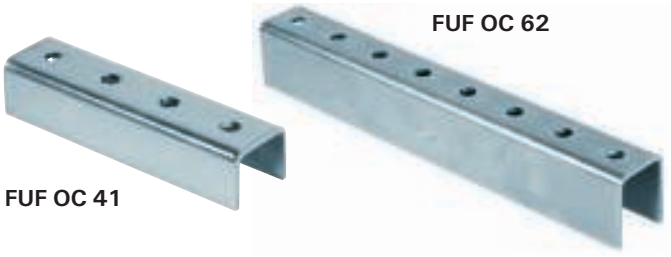

FUF OC 62

FUF OC 41

Properties:

Material	Steel DD11 acc. to DIN EN 10111
Zinc plating	Electro zinc plated min. 5 µm

DESCRIPTION

Advantages / Benefits

- Easy to install with FCN Clix P.

TECHNICAL DATA

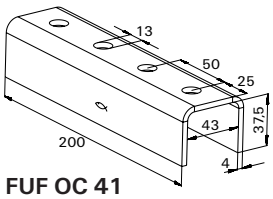

FUF OC 41

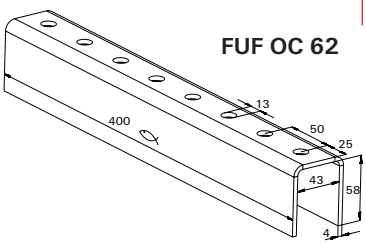

Type	Art. No.	Qty. per box pcs.	Thickness [mm]	Length [mm]
FUF OC 41	**504517**	20	4	200
FUF OC 62	**504518**	10	4	400

Rubber inlay EMS 41

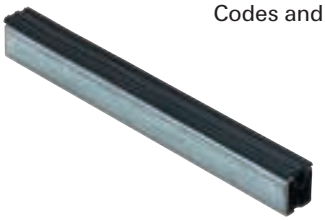

Codes and characteristics see on page 123

Channel nut FCN Clix

OVERVIEW

FCN Clix P

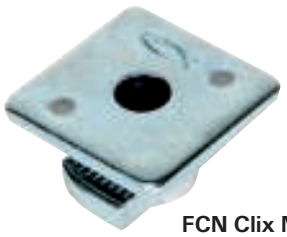

FCN Clix M

Properties:

Material	Steel S235 JR (material no. 1.0037) acc. DIN EN 10025, plastic nylon PA6
Zinc plating	Electro zinc plated, min. 5 µm

DESCRIPTION

- Fast connecting nut fitting to the FUS channel.
- FCN Clix P suitable for connecting channel and fittings.
- FCN Clix M suitable for connecting clamps with a threaded rod.
- To be used in connection with threaded rod G or GS, see page 130.

Advantages / Benefits

- Easy and precise positioning in the channel.
- Serration for secure hold in the FUS channel.

TECHNICAL DATA

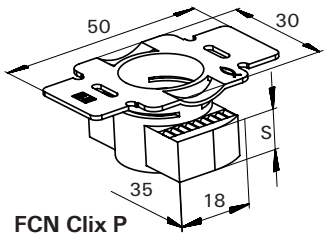

FCN Clix P

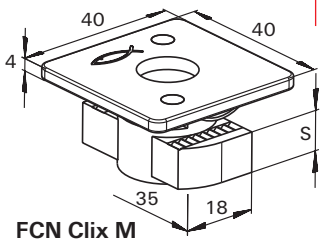

FCN Clix M

Type	Art. No.	Qty. per box	Thread M	Thickness S
		pcs.		[mm]
FCN Clix P 6	**504326**	100	M 6	6
FCN Clix P 8	**504327**	100	M 8	6
FCN Clix P 10	**504329**	100	M 10	8
FCN Clix P 12	**504331**	100	M 12	9.5
FCN Clix M 6	**504344**	100	M 6	6
FCN Clix M 8	**504345**	100	M 8	6
FCN Clix M 10	**504346**	100	M 10	8
FCN Clix M 12	**504347**	100	M 12	9.5

INSTALLATION

- Insert in to the channel and rotate 90°.

LOADS

FCN Clix P

Type	Max. recom. load (tension) $N_{rec.}$		Max. recom. load (shear)	Tightening torque screw quality 8.8
	FUS 2.0 mm	FUS 2.5 mm	$V_{rec.}$	
	[kN]	[kN]	[kN]	[Nm]
M6	3.0	3.0	1.0	10
M8	4.0	4.0	2.0	20
M10	5.0	8.0	2.5	40
M12	5.0	8.0	3.0	50

FCN Clix M

Type	Max. recom. load (tension) N_{rec}		Tightening torque screw quality 4.6
	FUS 2.0 mm	FUS 2.5 mm	
	[kN]	[kN]	[Nm]
M6	3.0	3.0	5
M8	4.0	4.0	10
M10	5.0	8.0	15
M12	5.0	8.0	20

T-head bolt FHS Clix S

OVERVIEW

FHS Clix-S

Properties:

Material	Steel DD11 (material no. 1.0332) acc. to DIN EN 10111
Zinc plating	Electro zinc plated, min. 5 µm

DESCRIPTION

- Quick lock hammer head bolt.

Advantages / Benefits

- Simple, fast and effective installation.
- Retrofitting in rails possible.
- Simple alignment in the rail.
- Fits to FUS and MS channels as well.

INSTALLATION

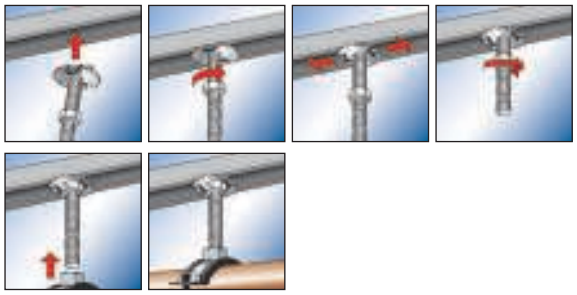

TECHNICAL DATA

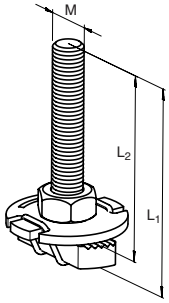

Type	Art. No.	Qty. per box	Thread D	Length L_1	Length L_2
		pcs.		[mm]	[mm]
FHS Clix S 8 x 30	**020914**	50	M 8	36	30
FHS Clix S 8 x 40	**020915**	50	M 8	46	40
FHS Clix S 8 x 60	**020916**	50	M 8	66	60
FHS Clix S 10 x 30	**020917**	50	M 10	37	30
FHS Clix S 10 x 40	**020918**	50	M 10	47	40
FHS Clix S 10 x 60	**020919**	50	M 10	67	60
FHS Clix S 12 x 30	**020969**	50	M 12	38	30
FHS Clix S 12 x 40	**047316**	50	M 12	48	40
FHS Clix S 12 x 60	**504320**	50	M 12	68	60

LOADS

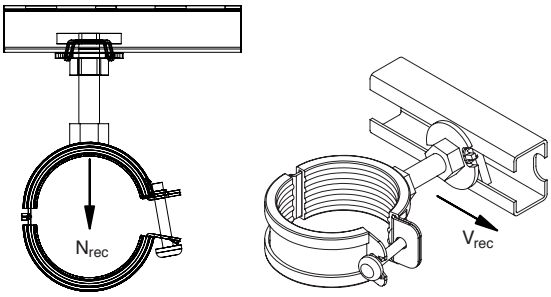

Type	Max. recom. load (tension) $N_{rec.}$		Max. recom. load (shear)	Tightening torque
	FUS 2.0 mm	FUS 2.5 mm	$V_{rec.}$	
	[kN]	[kN]	[kN]	[Nm]
M8	4.0	4.0	1.0	5
M10	4.0	5.0	1.2	10
M12	4.0	5.0	1.5	10

Channel nut FCN

OVERVIEW

FCN

Properties:

Material	Steel 1.1121 / 1.0310, SAE 1010
Zinc plating	Electro zinc plated, min. 5 µm

DESCRIPTION

- Threaded plate fitting to the FUS channels.

Advantages / Benefits

- Simple installation.
- Retrofitting in rails possible.

INSTALLATION

- Insert in to the channel and rotate 90°.

TECHNICAL DATA

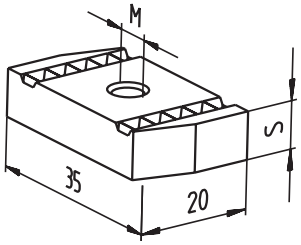

Type	Art. No.	Qty. per box	Thread M	Thickness S
		pcs.		[mm]
FCN 6	**77405**	100	M 6	6
FCN 8	**77407**	100	M 8	6
FCN 10	**77409**	100	M 10	8
FCN 12	**77411**	100	M 12	9

LOADS

Type	Max. recom. load (tension) $N_{rec.}$		Max. recom. load (shear)	Tightening torque screw quality 8.8
	FUS 2.0 mm	FUS 2.5 mm	$V_{rec.}$	
	[kN]	[kN]	[kN]	[Nm]
M6	3.0	3.0	1.0	10
M8	4.0	4.0	2.0	20
M10	5.0	8.0	2.5	40
M12	5.0	8.0	2.5	50

Channel washer HK 41

OVERVIEW

HK 41

Properties:

Material	Steel S235 JR (material no. 1.0037) acc. to DIN EN 10025
Zinc plating	Electro zinc plated, min. 8 µm

DESCRIPTION

- The channel washer can be used for proper fastening with a fixing, e.g. fischer anchor bolt.
- Used to secure connections.

Advantages / Benefits

- Prevents the rail from deformation.

INSTALLATION

TECHNICAL DATA

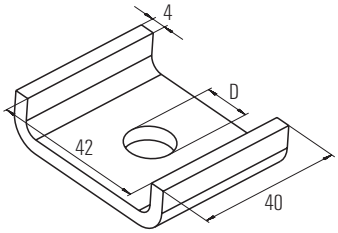

Type	Art. No.	Qty. per box	D
		pcs.	[mm]
HK 41 8.5	**504348**	50	8.5
HK 41 10.5	**504349**	50	10.5
HK 41 12.5	**504354**	50	12.5

Saddle flange SF

OVERVIEW

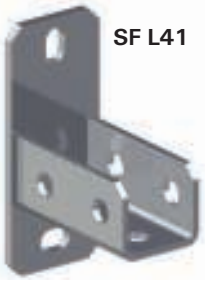
SF L41

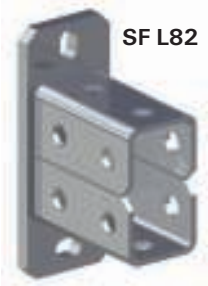
SF L82

SF L124

Properties:

Material	Base plate: DC01 (steel 1.0330) acc. DIN EN 10139 Channel: S235JR (material no. 1.0037) acc. to DIN EN 10025
Zinc plating	Electro zinc plated, min. 8 µm

DESCRIPTION

- Connecting element for producing robust constructions in connection with the fischer channels.

Advantages / Benefits

- Solid connecting element for load-bearing constructions.
- Simple installation by inserting the mounting rail in the saddle.

INSTALLATION

TECHNICAL DATA

SF L41

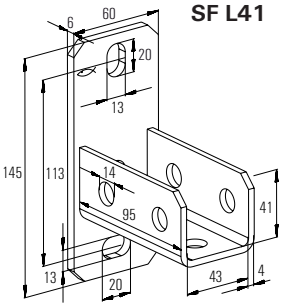

SF L82

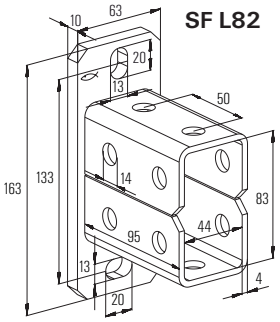

SF L124

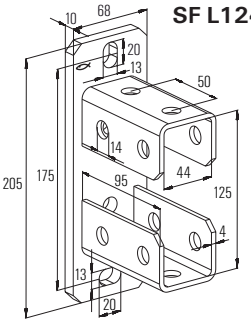

Type	Art. No.	Qty. per box	For profile FUS
		pcs.	
SF L 41	**504355**	10	21; 41; 21D; 62
SF L 82	**504357**	5	41D
SF L 124	**504358**	5	62D

LOADS

support on both sides

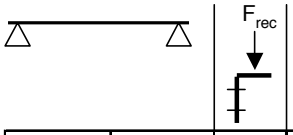

Connector	Channel	double	Torque
		[kN]	[Nm]
FCN P M12	41/21-2	6	50
	41/21-2.5	6	50
	41/41-2	6	50
	41/41-2.5	6	50
	41/62-2.5	6	50

Universal bracket UW S

OVERVIEW

Properties:

Material	Steel DD 11 acc. to DIN EN 10111
Zinc plating	Electro zinc plated, min. 5 µm

DESCRIPTION

- Stable angle bracket for reinforcing load-bearing constructions.

Advantages / Benefits

- Ideal, flexible construction element due to the option of horizontal and vertical alignment.
- In combination with fischer mounting rails, the universal bracket produces a load-bearing construction with very high stability and safety.

INSTALLATION

Installation tip

- The universal bracket should be used in pairs.

TECHNICAL DATA

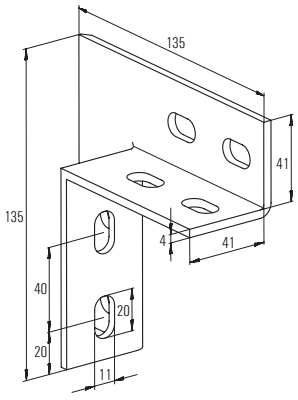

Type	Art. No.	Qty. per box pcs.
UW S	**49479**	10

LOADS

support on both sides

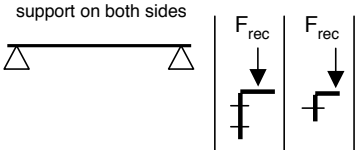

Connector	Channel	double [kN]	single [kN]	Torque [Nm]
FCN P M10	41/21-2	5	2,5	40
	41/21-2,5	5	2,5	40
	41/41-2	5	2,5	40
	41/41-2,5	5	2,5	40
	41/62-2,5	5	2,5	40

Angle bracket WK

OVERVIEW

WK 100/100

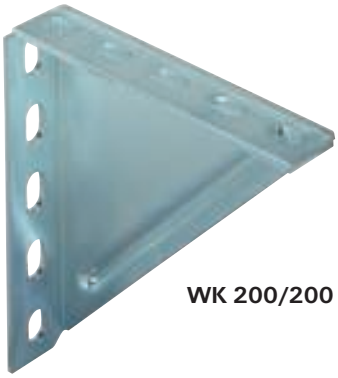

WK 200/200

Properties:

Material	Steel DD11 (material no. 1.0332) acc. to DIN EN 10111
Zinc plating	Electro zinc plated, min. 8 µm

DESCRIPTION

- Stable angle bracket for fixing pipe lines and components.
- The angle bracket acts as a reinforcement for load-bearing constructions.

Advantages / Benefits

- Versatile possibilities for wall, floor and ceiling installation, can be used in shafts and also free-standing.
- In combination with fischer mounting rails, the universal bracket produces a load-bearing construction with very high stability and safety.

INSTALLATION

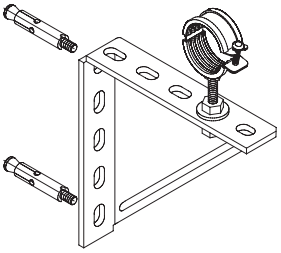

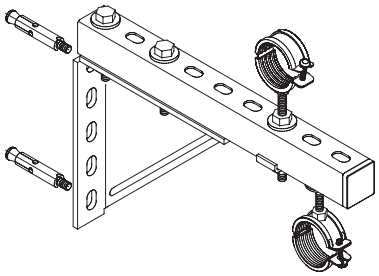

TECHNICAL DATA

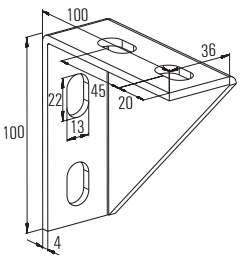

WK 100/100

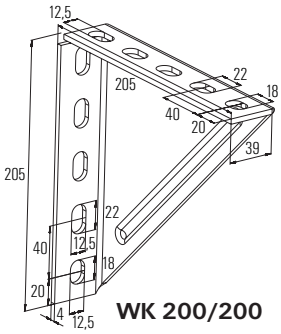

WK 200/200

Type	Art. No.	Qty. per box
		pcs.
WK 100/100	**63559**	5
WK 200/200	**79570**	5

LOADS

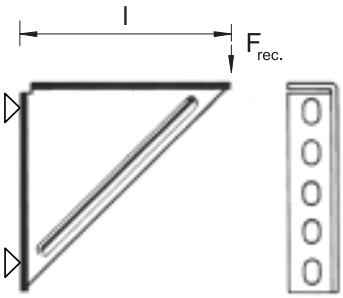

Angle bracket WK 100

Length l in mm	80	
Max. recom. static load $F_{rec.}$ in kN:	4.0	

Angle bracket WK 200/200

Length l in mm	100	180
Max. recom. static load $F_{rec.}$ in kN:	4.0	1.8

Universal mounting UHRS

OVERVIEW

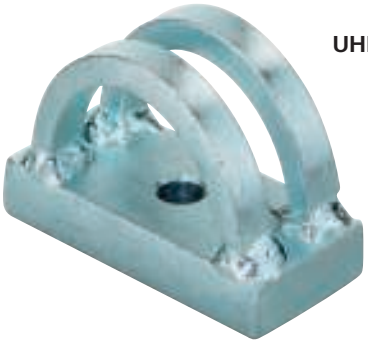

UHRS

Properties:

Material	Steel S235 JRG (material no.1.0038) acc. to DIN EN 10025
Zinc plating	Electro zinc plated, min. 3 µm

DESCRIPTION

- Variable angle bracket for bracing with threaded rods.

Advantages / Benefits

- Fits to FHS Clix S M12.

INSTALLATION

TECHNICAL DATA

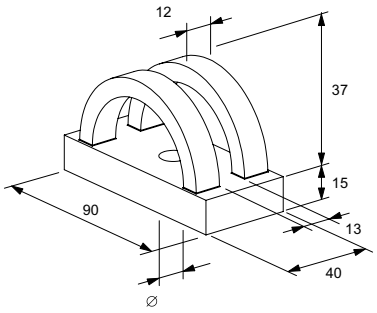

UHRS

mm

mm

mm

mm

mm

mm

12

Type	Art. No.	Qty. per box pcs.
UHRS	**63938**	6

LOADS

F_{rec} = 8.3 kN

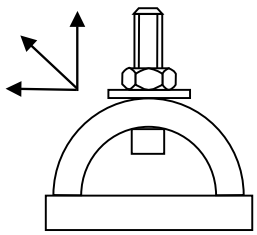

Variable bracket VB

OVERVIEW

VB

Properties:

Material	Steel DD11 (material no. 1.0332) acc. to DIN EN 10111
Zinc plating	Electro zinc plated min. 5 µm

DESCRIPTION

- Bracket for MS and FUS channel installations from 45° till 90°.

Advantages / Benefits

- Very flexible in angle.
- Ideal for bracings.

INSTALLATION

TECHNICAL DATA

VB

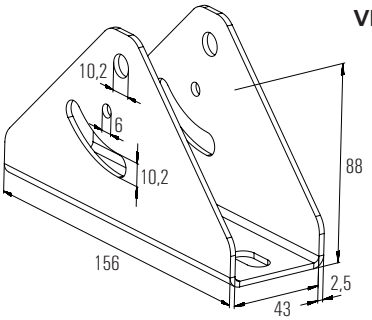

Type	Art. No.	Qty. per box pcs.
VB	**04850**	4

LOADS

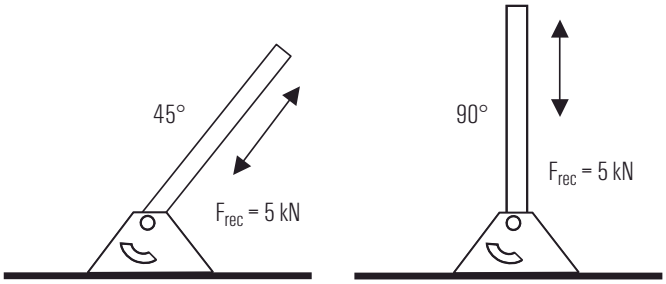

Beam clamp TKR

OVERVIEW

TKR

Properties:

Material	Plate / U-bolt pipe hanger: Steel S235 JR (material no. 1.0037) acc. DIN EN 10025 Hexagon nut: Steel acc. ISO 898-2 resistance min. 4
Zinc plating	Electro zinc plated, min. 5 µm

DESCRIPTION

- Stirrup for fastening profile rails to steel beams.

Advantages / Benefits

- Easy to add on.
- No drilling or welding necessary.
- Adjustment is possible at any time.
- Due to the different lengths of the claw sides, the fischer clamp support can be fastened to all standard T-beams.

INSTALLATION

- Two clamp supporters are necessary for fastening to the steel beam.

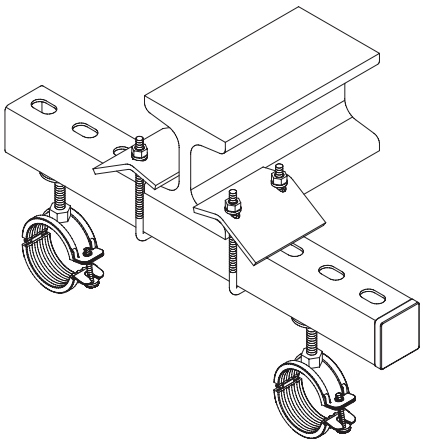

TECHNICAL DATA

TKR

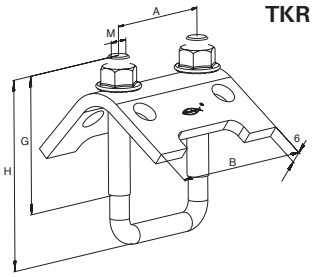

Type	Art. No.	Qty. per box	For profile FUS	Width B	Height G	Height H	Thread M	Width A
		pcs.		[mm]	[mm]	[mm]	[mm]	[mm]
TKR 21-42	**504363**	20	21, 41, 21D	79	48	97	8	52
TKR 82	**504366**	20	62, 41D	79	80	137	10	54
TKR 124	**504367**	10	62D	79	80	179	10	54

LOADS

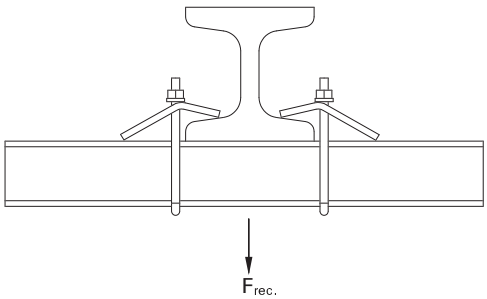

Type	Fits profile	Thread	Max. recom. load / pair $F_{rec.}$ [kN]	Tightening torque [Nm]
TKR 21-42	21, 41, 21 D	M8	5.0	15
TKR 82	62, 41 D	M10	10.0	20
TKR 124	62 D	M10	10.0	20

Threaded rod bracket FSB 45°

OVERVIEW

FSB 45°

Properties:

Material	Steel DD11 (material no. 1.0332) acc. to DIN EN 10111
Zinc plating	Electro zinc plated min. 5 µm

DESCRIPTION

- 45° angle bracket for bracing with M10 threaded rod.

Advantages / Benefits

- Quick inserting of pre-assembled threaded rod and nuts.

INSTALLATION

TECHNICAL DATA

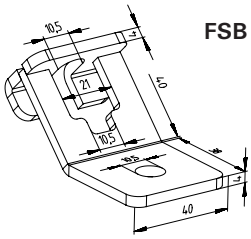

FSB 45°

Type	Art. No.	Qty. per box pcs.
FSB 45°	**71269**	20

LOADS

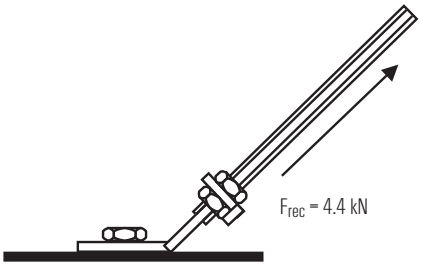

Flat fittings FFF

OVERVIEW

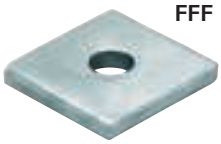
FFF 1

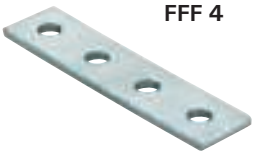
FFF 4

FFF 4D

FFF 3L

FFF 4T

Properties:

Material	Steel DD11 (material no. 1.0332) acc. to DIN EN 10111
Zinc plating	Electro zinc plated min. 5 µm

DESCRIPTION

- For plane installations with FUS channels.

TECHNICAL DATA

FFF 1

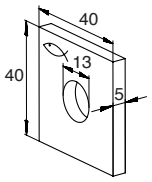

FFF 4

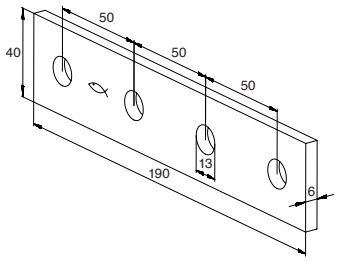

FFF 4T

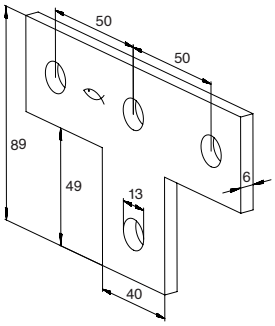

FFF 3L

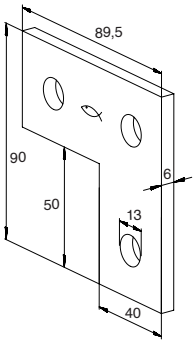

FFF 4D

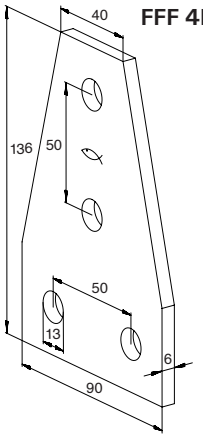

Type	Art. No.	Qty. per box pcs.
FFF 1 - Flat fitting	**504494**	25
FFF 3L - Flat fitting	**504498**	25
FFF 4 - Flat fitting	**504499**	25
FFF 4T - Flat fitting	**504500**	25
FFF 4D - Flat fitting	**504368**	25

Angle fittings FAF

OVERVIEW

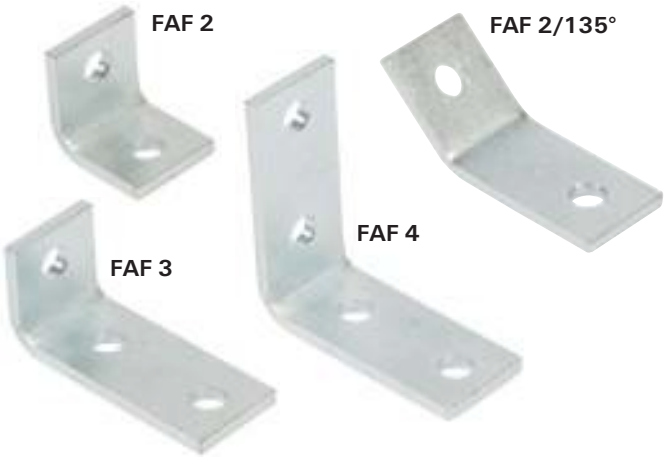

Properties:

Material	Steel DD11 (material no. 1.0332) acc. to DIN EN 10111
Zinc plating	Electro zinc plated min. 5 µm

DESCRIPTION

- For plane and frame installations with FUS channels.

TECHNICAL DATA

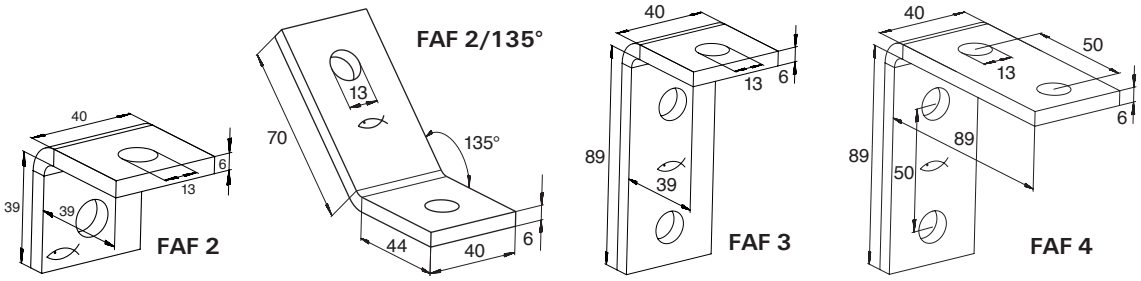

Type	Art. No.	Qty. per box pcs.
FAF 2 - angle fittings	**504501**	25
FAF 3 - angle fittings	**504506**	25
FAF 4 - angle fittings	**504509**	25
FAF 2/135° - angle fittings	**504369**	25

LOADS

support on both sides

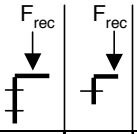

Connector	Channel	double [kN]	single [kN]	Torque [Nm]
FCN P M12	41/21-2	6	3	50
	41/21-2,5	6	3	50
	41/41-2	6	3	50
	41/41-2,5	6	3	50
	41/62-2,5	6	3	50

FUS 3D flanges FZF, FUF

OVERVIEW

FZF 21

FZF 41

FUF 21

FUF 41

FUF 180°R

FUF 180°L

FUF 4Y

FUF 8T

Properties:

Material	Steel DD11 (material no. 1.0332) acc. to DIN EN 10111
Zinc plating	Electro zinc plated min. 5 µm

DESCRIPTION

- Connecting elements for 3D frame installations with FUS channels.

Advantages / Benefits

- Quick installation by using FCN Clix P.

TECHNICAL DATA

FZF 21

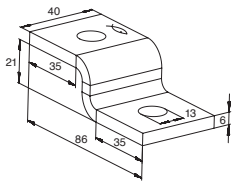

FZF 41

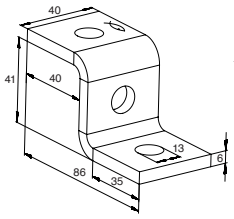

FUF 21

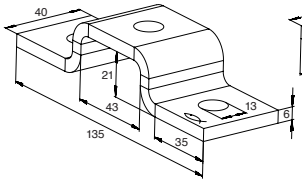

FUF 41

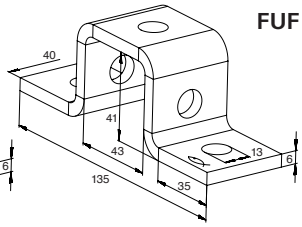

Type	Art. No.	Qty. per box pcs.
FZF 21	**504375**	25
FZF 41	**504515**	25
FUF 21	**504376**	25
FUF 41	**504377**	25

FUF 180°R

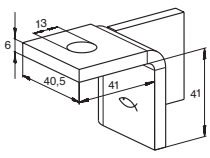

FUF 180°L

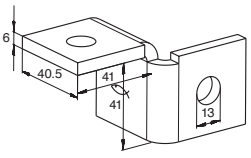

FUF 4Y

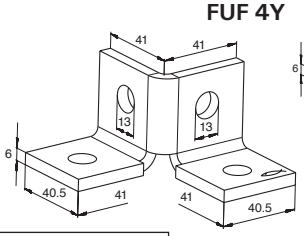

FUF 8T

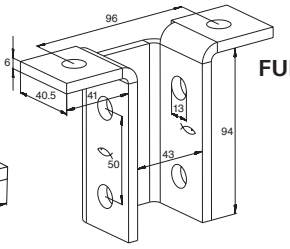

Type	Art. No.	Qty. per box pcs.
FUF 4Y	**504378**	20
FUF 180°L	**504379**	20
FUF 180°R	**504383**	20
FUF 8T	**504387**	10

Installation Grid

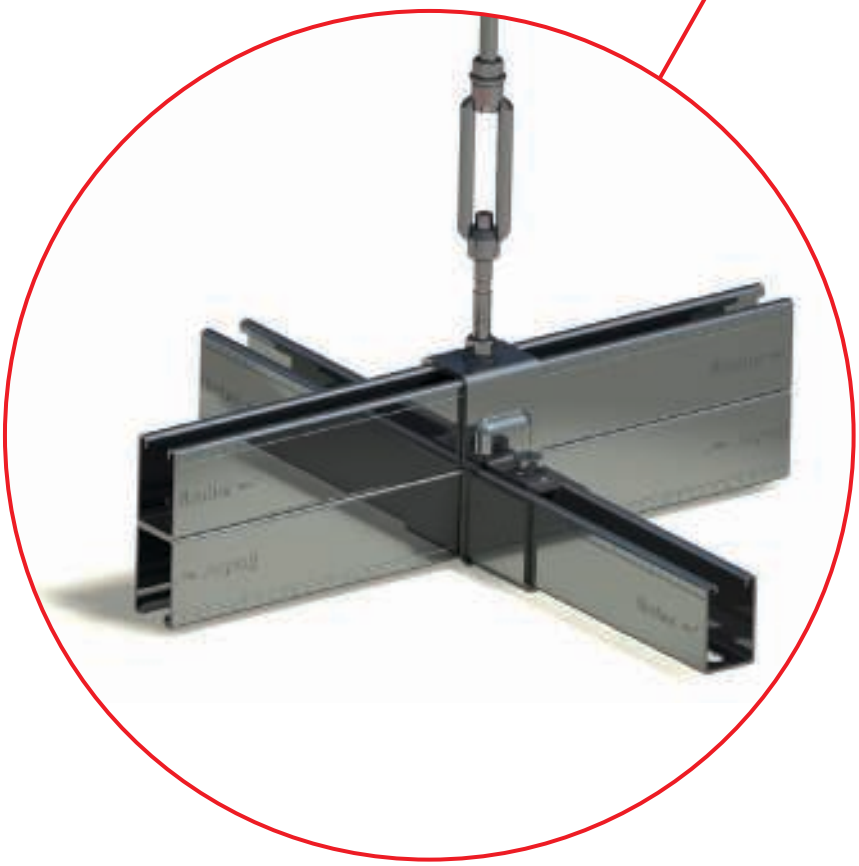

Fit for today's and tomorrow's demands

Planning for the future means constantly being prepared to meet new requirements. That is why the fischer Installation Grid is the installation system for modern and future supply technology in industrial buildings. Its strengths are:

- quick installation and consequent low costs
- high flexibility and adaptability to change utilization of buildings
- good order and organization in media supply
- new design perspectives
- highly economical over the entire duration of utilization
- clear calculation of time and cost thanks to modular construction
- support in planning and installation provided by fischer engineers

backed up by the entire know-how and experience of a leading manufacturer of fixing systems.

Effective installation with the fischer Installation Grid

A separate level for the installation of media-supply equipment is constructed under the ceiling using a system of rails and special fixing elements from the fischer SaMontec program. This Installation Grid can be specially adapted for any building.

Installation Grid

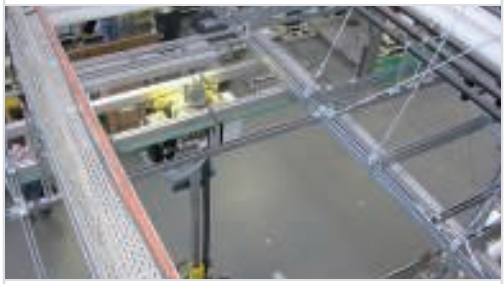

By means of fischer Installation Grid, media of all kind can be supplied to any point in the production area.

- Pipes for ventilation, heating, air conditioning and water.
- Supply pipes for compressed air, technical gases and the removal of exhaust fumes or for the supply of liquids to the production area.
- Ducts and supports for power cables, data lines etc.
- Electrical installation like cable trays.
- Lamps, lightening strips.
- Overhead heating systems.
- Noise-damping elements.
- Industrial construction.

Channels
FUS **Page 101**

Connectors
FCN Clix P **Page 103**

Channel Connectors
FVS **Page 100**

UHRS, FHS Clix-S **Page 102**

FSB 45° **Page 103**

VM **Page 102**

SPS / BLR **Page 102**

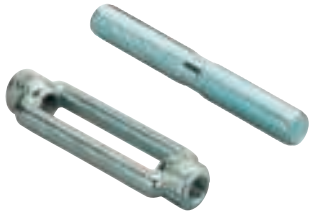

FUF OC 62 **Page 101**

TKR **Page 102**

Cross connector FVS

OVERVIEW

FVS 3

FVS 4

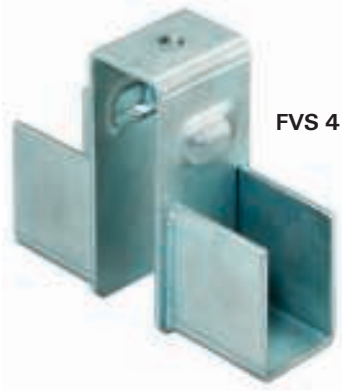

Properties:

Material	Steel material no. 1.0037 acc. to DIN EN 10025
Zinc plating	Electro zinc plated, min. 5 µm

DESCRIPTION

- 90° cross connector to be assembled between channels FUS 41/62 and FUS 41/124.

Advantages / Benefits

- Simple and time-saving production of a channel grid.
- Easy suspension to the ceiling with M12 threaded rod.
- Installation possible by one man worker.

INSTALLATION

TECHNICAL DATA

FVS 3

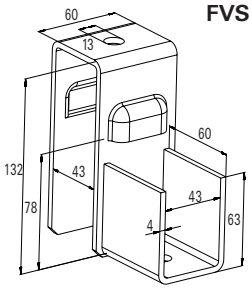

FVS 4

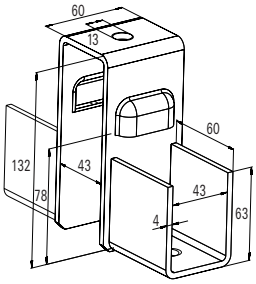

Type	Art. No.	Qty. per box	for profile
		pcs.	
FVS 3	**505549**	8	FUS 62 + FUS 62D
FVS 4	**505550**	5	FUS 62 + FUS 62D

FUS

Type	Art. No.	Qty. per box pcs.
FUS 62/2,5 - 6 m	**504457**	1
FUS 62D/2,5 - 6 m	**504460**	1

Codes and characteristics see on page 74

FUF OC

Type	Art. No.	Qty. per box pcs.	Holes	Thinness	Length
FUF OC 62	**504518**	10	14	4	400

Codes and characteristics see on page 81

Channel washer HK 41

Type	Art. No.	Qty. per box pcs.
HK 41 12,5	**504354**	50

Codes and characteristics see on page 85

Threaded rod G

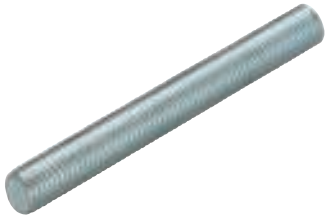

Type	Art. No.	Qty. per box pcs.	Length [mm]
G M12/3	**064056**	5	3000

Codes and characteristics see on page 130

Hexagonal nut MU / Washer U

Type	Art. No.	Qty. per box pcs.
MU 12	**024650**	100
U 12 x 40	**024649**	100

Codes and characteristics see on pages 135 and 136

Hexagonal connector VM

Type	Art. No.	Qty. per box pcs.
VM M12	**020971**	100

Codes and characteristics see on page 136

Turnbuckle SPS / Bolt left-hand/right hand BLR

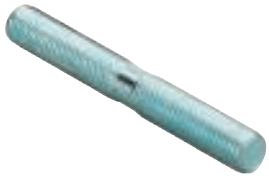

Type	Art. No.	Qty. per box pcs.
SPS	**064090**	25
BRL	**064091**	25

Codes and characteristics see on page 133

Beam clamp TKR

Type	Art. No.	Qty. per box pcs.
TKR 124	**504367**	10

Codes and characteristics see on pages 91

Universal mounting UHRS / T-head bolt FHS Clix-S

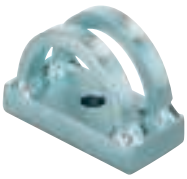

Type	Art. No.	Qty. per box pcs.
UHRS	**063938**	6
FHS Clix-S 12 x 30	**020969**	50

Codes and characteristics see on pages 83 and 89

Cover cap FEC

FEC 62 B

Type	Art. No.	Qty. per box pcs.	for Profil	Material
FEC 62 B	**505551**	100	FUS 62	polyethylene

Codes and characteristics see on page 81

Threaded rod bracket FSB 45°

Type	Art. No.	Qty. per box pcs.
FSB 45°	**71269**	20

Codes and characteristics see on page 92

Clix channel nut FCN Clix

Type	Art. No.	Qty. per box pcs.	Thread M [mm]	Thickness S
FCN Clix P 12	**504331**	100	M 12	9.5

Codes and characteristics see on page 82

Channel nut FCN

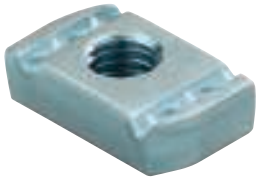

Type	Art. No.	Qty. per box pcs.	Thread M	Thickness S [mm]
FCN 12	**77411**	100	M 12	9

Codes and characteristics see on page 84

Hexagonal screw SKS

Type	Art. No.	Qty. per box pcs.	Length L [mm]	Thread D	Width across nut SW
SKS 12 x 20	**077610**	100	20	M 12	19

Codes and characteristics see on page 135

Fixpoint and Sliding Elements

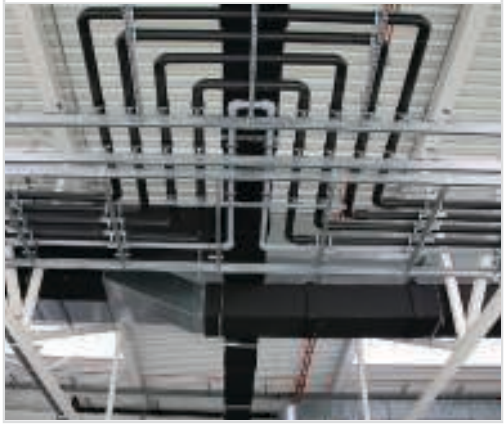

A complete range of products suitable for controlling the thermal expasion of pipes in systems like:

- **heating**
- **cooling**
- **industrial process fluids**

fix point is also suitable to keep the load of rising pipes.

Fix point
FSFP **Page 107**

Sliding elements
GL, GLL **Page 110**

PDH **Page 115**

FFPS **Page 108**

FFPK **Page 108**

GPS, GPL, GPR **Page 109**

G, GS **Page 109**

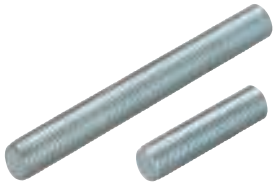

SBS **Page 111**

FSC 1 **Page 112**

GLK **Page 113**

SB **Page 114**

Expansion diagram of pipe materials

Metals and plastics shrink in cold and expand in heat. This physical condition must be taken into consideration for pipe lines in the heating area that are subjected to continuous temperature fluctuation because of thermostat control. Tension forces are prevented by the use of suitable pipe fasteners that can swing or slide.

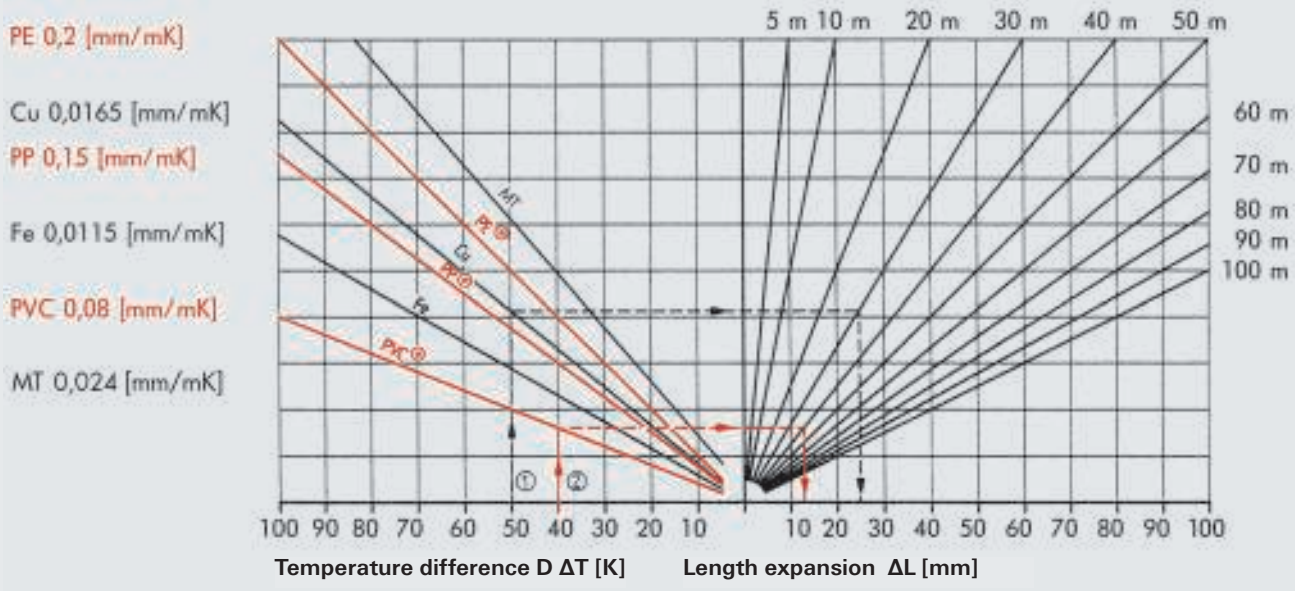

Note:
For plastic pipes (PE, PP, PVC), the length expansionread from the diagram is to be multiplied by a factor of 10.

Example:
①Copper pipe, Cu – Length of pipe span 30 m
Temperature difference △T = 50 K
Length expansion △ L= 24,75 mm

②PVC pipe – Length of pipe span L = 40 m
Temperature difference △ T = 40 K
Length expansion △ L = 128 mm (table value x10)

Length expansion calculation formula

$$\triangle L = L \cdot \triangle T \cdot \alpha$$

[mm] [m] [K] [mm/m K]

△ L = Change in length
L = Length of the pipe span/section
△ T = Temperature difference
α = Length expansion coefficient

Sound Insulated Fix Point FSFP

OVERVIEW

FSFP

Properties:

Material	Steel S235JR (material no. 10038) acc. to DIN EN 10025
Zinc plating	Electro zinc plated, min. 5 µm
Sound insulation insert	Material: SBR/EPDM; chlorine-free; silicone-free
Insert for sound insulation	19 dB (A)
Temperature range	-40° to +100 °C
Hardness	55 ± 5° Shore A

DESCRIPTION

- Fix points keep unwanted movements between pipes and buildings and drive expansion in the desired direction.

Advantages/Benefits

- High loads of sound insulated pipes can be taken in and fixed in each position of installation.
- Ageing and curing of the silencer of heat load by the pipe is excluded. This way, the quality decline of the sound insulation is not possible.
- The Fix Point FSFP is completely preassembled.

TECHNICAL DATA

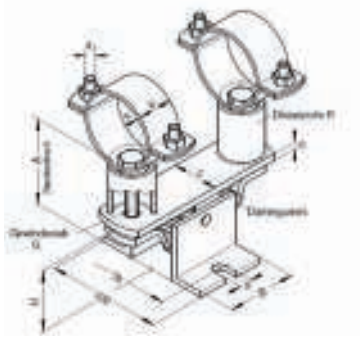

Type	Art. No.	Qty. per box	Max. recom. load (compression, tension, thrust force for pipes)	Size	Pipe Ø	Locking screw	Width x thickness clamp band	Height	Height	Band	Width	Slotted hole
						d_1	b x s	A	H	c x h	B	d
		[pcs.]	[kN]	[inch]	[mm]		[mm]	[mm]	[mm]	[mm]	[mm]	[mm]
FSFP 1"	**512716**	1	4.0	1"	33.7	M 6	20 x 1.5	110	55	30 x 5	60	11
FSFP 1 1/4"	**512717**	1	4.0	1 1/4"	42.4	M 6	20 x 2.0	110	55	30 x 5	60	11
FSFP 1 1/2"	**512718**	1	4.0	1 1/2"	48.3	M 6	20 x 2.0	110	55	30 x 5	60	11
FSFP 2"	**512719**	1	4.0	2"	60.3	M 8	30 x 2.5	110	55	40 x 6	60	11
FSFP 2 1/2"	**512720**	1	4.0	2 1/2"	76.1	M 8	30 x 2.5	110	55	40 x 6	60	11
FSFP 3"	**512721**	1	4.0	3"	88.9	M 8	30 x 2.5	110	55	40 x 6	60	11
FSFP 4"	**512722**	1	4.0	4"	114.3	M 8	30 x 2.5	110	55	40 x 6	60	11

Fixpoint Clamp FFPS and saddle FFPK

OVERVIEW

FFPS

FFPK

Properties:

Material	Steel DD 11 (material no. 1.0322 acc. to DIN EN 10111)
Zinc plating	Electro zinc plated, min. 5 µm

DESCRIPTION

- Fixpoints keep unwanted movements between pipes and buildings and drive expansion in the desired direction.

Advantages / Benefits

- It's a modular system, so it can be built-up according to the loads.
- High loads are possible.
- Saddle allows a good height and inclination adjustment.
- Clamps and brackets are complete with all screws, washers and damps.

TECHNICAL DATA

FFPS

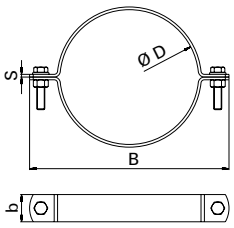

FFPK

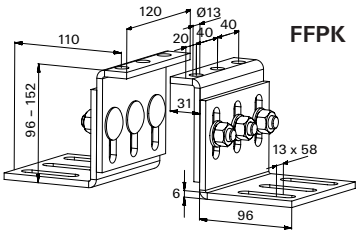

Type	Art. No.	ID	Qty. per box	Size	Width	Locking screw	Width x thickness clamp band	Clamping range
			pcs.	[inch]	B [mm]		b x s [mm]	D [mm]
FFPS								
FFPS 2"	**48510**	1	1	2"	137	M 12	40 x 4	56 - 61
FFPS 2 1/2"	**48511**	8	1	2 1/2"	156	M 12	40 x 4	75 - 80
FFPS 3"	**48512**	5	1	3"	170	M 12	40 x 4	88 - 93
FFPS 4"	**48513**	2	1	4"	191	M 12	40 x 4	108 - 115
FFPS 5"	**48660**	3	1	5"	217	M 12	40 x 4	133 - 140
FFPS 159 - 166	**48662**	7	1	159 - 166	243	M 12	40 x 4	159 - 166
FFPS 6"	**48663**	4	1	6"	250	M 12	40 x 4	167 - 172
FFPS 8"	**48664**	1	1	8"	303	M 12	40 x 4	219 - 225
FFPS 10"	**48665**	8	1	10"	351	M 12	40 x 4	267 - 274
FFPK								
FFPK	**48666**	5	1	-	-	-	-	-

Fixpoint Clamp FFPS and saddle FFPK

LOADS

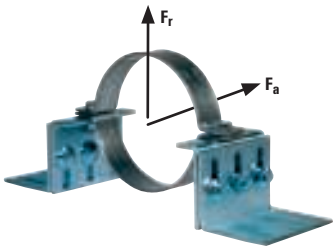

Fixpoint 1 clamp
Max. recom. load
axial F_a = 8000 N
radial F_r = 4660 N

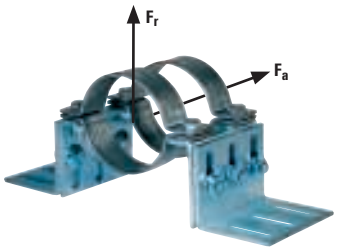

Fixpoint 2 clamps
Max. recom. load
axial F_a = 16000 N
radial F_r = 9320 N

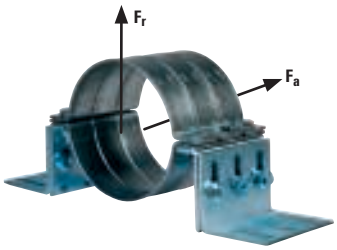

Fixpoint 3 clamps
Max. recom. load
axial F_a = 24000 N
radial F_r = 13980 N

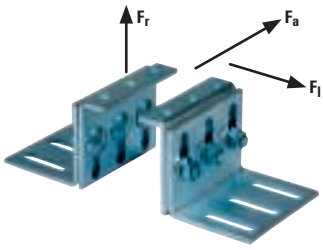

FFPK
Saddle max. recom. loads
radial F_r = 42000 N
lateral F_l = 17500 N

Base plate GPL / GPS / GPR

GPL, GPS

GPR

Codes and characteristics see on page 128

Rods and studs G / GS

G

GS

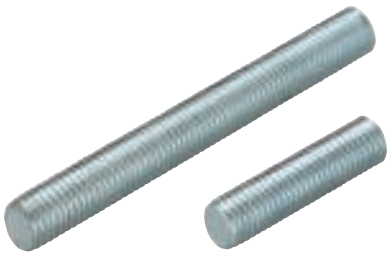

Codes and characteristics see on page 130

Sliding element GL

OVERVIEW

GLL 3/4“

GL 3/4“

Properties:

Material	Steel S235 JR (material no. 1.0037) acc. to DIN EN 10025
Zinc plating	Electro zinc plated, min. 8 µm
Sliding strips material	Polyamid 6.6
Adhesion friction factor	0.27 – 0.3
Sliding friction factor	0.13 – 0.17
Thermal load capacity	up to +130

DESCRIPTION

- Sliding element with a maximum sliding length of 165 mm for absorbing axial length changes of pipe lines.

Advantages / Benefits

- Low construction height.
- No sliding out possible and secure due to double pipe support.
- Large sliding distance.

TECHNICAL DATA

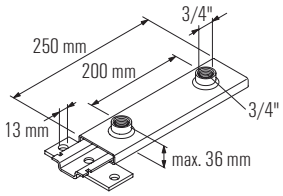

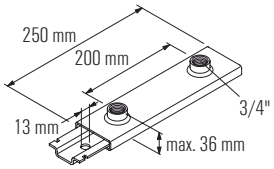

Type	Art. No.	Qty. per box pcs.
GLL 3/4“	**064038**	5
GL 3/4“	**064041**	5

LOADS

Type	Max. recom. static load (tension) [kN]	Max. recom. static load (compression) [kN]	Max. recom. length of pipe nipple [mm]	Max. recom. pipe-Ø
GLL 3/4“	3.50	4.00	200	up to DN 200
GL 3/4“	3.50	4.00	200	up to DN 200

Sliding saddle SBS

OVERVIEW

SBS

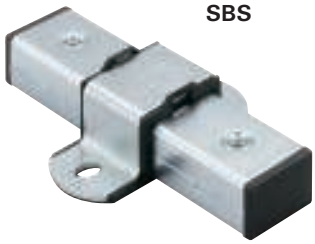

SBS 12/16

Properties:

Material	Steel DD11 (material no. 1.0332) acc. to DIN EN 10111 / PA GF 20
Zinc plating	Electro zinc plated, min. 5 µm
Adhesion friction factor	0.25 – 0.30
Sliding friction factor	0.16 – 0.18
Temp. range	-40 °C – +100 °C

Fire resistance classification **F 120** Pipe clamp type see test report

DESCRIPTION

Advantages / Benefits

- No sliding out possible.
- Secure due to double pipe support.
- Low construction height.

INSTALLATION

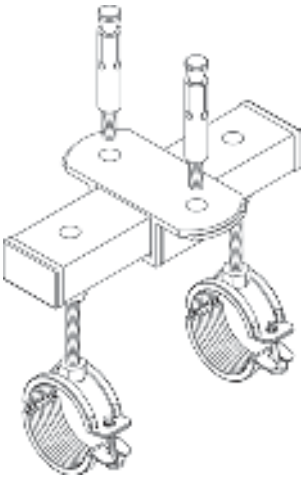

TECHNICAL DATA

SBS

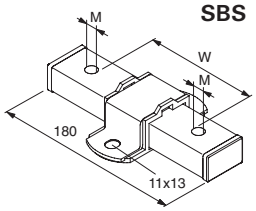

SBS 12/16

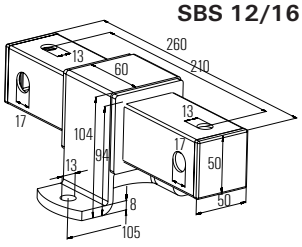

Type	Art. No.	Qty. per box	Max. recom. length between pipe and sliding elements	Max. recom. pipe-Ø	Thread-Ø M	Sliding distance W
		pcs.	[mm]		[mm]	[mm]
SBS M 8	**079685**	8	70	up to DN 80	M 8	60
SBS M 10	**079686**	8	70	up to DN 80	M 10	55
SBS 12/16	**047726**	1	140		M 12 / M 16	125

LOADS

Type	Max. recom. static load (compression)	Max. recom. static load (tension)		
	[kN]	[kN]		
SBS M 8	1.50	1.50		
SBS M 10	1.50	1.50		
SBS 12/16	7.80	7.80		

Slip of sliding FSC1

OVERVIEW

Properties:

Material	Steel DD 11 (material no. 1.0322 acc. to DIN EN 10111)
Zinc plating	Electro zinc plated, min. 5 µm
Temp. range	-30 °C - +120 °C

DESCRIPTION

- Sliding element with a max. sliding distance of 100 mm for absorbing axial length changes of pipe lines.

INSTALLATION

Installation tip

- Bend the 4 features on baseplate to stop the max. sliding.

TECHNICAL DATA

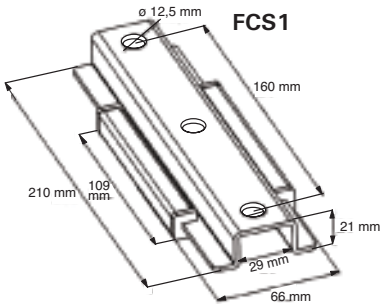

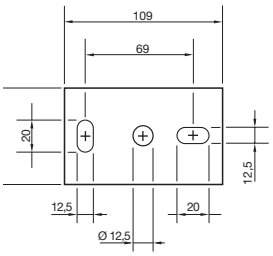

Type	Art. No.	Qty. per box	Max. recom. length between pipe and sliding elements	Sliding distance W
		pcs.	[mm]	[mm]
FCS1	**507866**	12	140	100

LOADS

Type	Max. recom. static load (tension)	Max. recom. static load (compression)
	[kN]	[kN]
FSC 1	1.3	1.0

Sliding insert GLK

OVERVIEW

GLK 27

GLK 38

Properties:

Material	PA 6 GF 20
Adhesion friction factor	0.25 - 0.30
Sliding friction factor	0.16 - 0.18
Temp. range	-40 °C - +120 °C

DESCRIPTION

- Sliding element with a long distance for absorbing axial length changes of pipe lines.

Advantages / Benefits

- Absorption of axial and radial length expansions of pipe lines possible in combination with two sliding elements.
- Large sliding distance possible.

INSTALLATION

Installation tip

- Threaded pin must be screwed completely through the sliding element.
- Projecting thread length during use with a pipe clamp must not exceed 70 mm (M8) and/or 100 mm (M10).

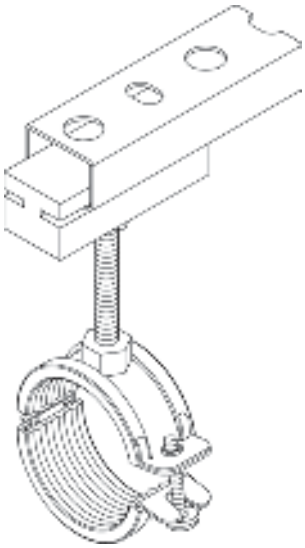

TECHNICAL DATA

GLK 27

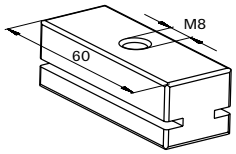

GLK 38

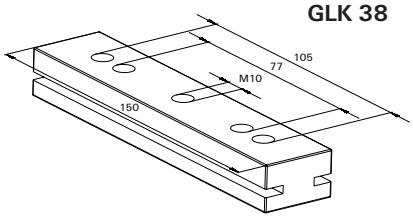

Type	Art. No.	Qty. per box	for profile	Thread A	Max. recom. length pipe nipple	Max. recom. pipe-Ø
		pcs.			[mm]	
GLK 27	**079683**	50	27/18 + 28/30	M8	70	up to DN 50
GLK 38	**079684**	20	38/40 + 40/60 + 40/120	M10	100	up to DN 80

LOADS

Type	Max. recom. static load
	[kN]
GLK 27	1.00
GLK 38	1.00

Sliding hanger SB

OVERVIEW

SB

Properties:

Material	Steel DD11 (material no. 1.0332) acc. to DIN EN 10111
Zinc plating	Electro zinc plated, min. 5 µm

Fire resistance classification
F 120
Pipe clamp type see test report

DESCRIPTION

- Sliding element with a long distance for absorbing axial length changes of pipe lines.

Advantages / Benefits

- Secure, moves freely and runs quietly.
- Absorbs axial length expansions of pipe lines.

INSTALLATION

Installation tip

- Install sliding element according to the expected length expansion, so that no sliding distance is lost and sliding is not impeded.

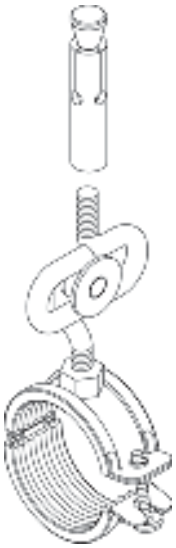

TECHNICAL DATA

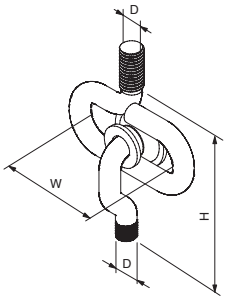

Type	Art. No.	Qty. per box	Thread A	Sliding distance	Overall height
		pcs.		[mm]	[mm]
SB M 8	**079680**	25	M 8	30	75
SB M 10	**079681**	25	M 10	30	90

LOADS

Type	Max. recom. static load [kN]
SB M 8	0.40
SB M 10	0.65

Pendulum hanger PDH / PDH K

OVERVIEW

PDH

Properties:

Material	Steel DD11 (material no. 1.0332) acc. to DIN EN 10111
Zinc plating	Electro zinc plated, min. 5 µm

DESCRIPTION

- Individual fastening with flexible pendulum effect for absorbing length changes of pipe lines.

Advantages / Benefits

- Degree of freedom 360°
- Max. pendulum effect is 12°.
- Good height adjustability.
- High tensile strength.

INSTALLATION

Installation tip

- For movable pipes, the pendulum hangers must be installed in pairs for secure guiding free of tipping.
- Secure threaded rod with lock nut to prevent loosening.

TECHNICAL DATA

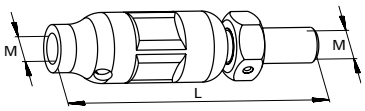

Type	Art. No.	Qty. per box	Thread (internal/ external)	Length L	Level control
		pcs.		[mm]	[mm]
PDH M 8	**079676**	50	M 8	74	25
PDH M 10	**079677**	50	M 10	78	25
PDH M 12	**064037**	25	M 12	89	25
PDH K M 8	**068267**	50	M 8	48	-
PDH K M 10	**068269**	50	M 10	52	-

LOADS

Type	Max. recom. static load (centr. tension) $N_{recom.}$ [kN]			
PDH M 8	2.40			
PDH M 10	3.00			
PDH M 12	3.50			
PDH K M 8	2.40			
PDH K M 10	3.00			

Air duct and Metal roof fixings

Fixing systems for air ducts

Fixing systems on trapez ceiling

Clamp
LGS
Page 119

Duct hanger
LKH / LKHN
Page 121

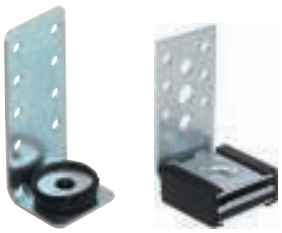

Metal roof hanger
TZ
Page 124

ZKH / ZKHN **Page 121**

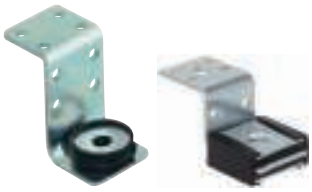

LRB **Page 122**

EMS **Page 123**

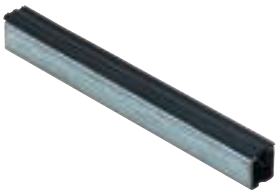

TZH **Page 124**

LZ **Page 125**

LST **Page 125**

Dimensions, weights of ventilation ducts

WEIGHTS OF GALVANIZED VENTILATION DUCTS IN KG/M WITHOUT INSULATION

Sheet metal 0.75			Sheet metal 0.88						Sheet metal 1.0						Sheet metal 1.13						Sheet metal 1.25				
200	224	250	280	315	355	400	450	500	560	630	710	800	900	1000	1120	1250	1400	1600	1800	2000	2240	2500	2800	3150	◄B ▼H
6.6	7.0	7.4	9.3	10.0	10.7	11.6	12.6	13.6	16.7	18.3	20.0	22.0	24.2	26.4	32.8	36.0	39.8	44.7	49.7	54.7	70.2	77.6	86.3	96.3	200
	7.4	7.8	9.8	10.4	11.2	12.1	13.0	14.0	17.2	18.8	20.5	22.5	24.7	26.9	33.4	36.6	40.4	45.3	50.3	55.3	70.8	78.3	86.9	97.0	224
		8.3	10.3	10.9	11.7	12.6	13.6	14.5	17.8	19.4	21.1	23.1	25.3	27.5	34.1	37.3	41.0	46.0	51.0	55.9	71.6	79.1	87.7	97.8	250
			10.8	11.5	12.3	13.2	14.1	15.1	18.5	20.0	21.8	23.8	26.0	28.2	34.8	38.0	41.8	46.7	51.7	56.7	72.5	79.9	88.6	98.6	280
				12.2	13.0	13.8	14.8	15.8	19.3	20.8	22.6	24.5	26.7	28.9	35.7	38.9	42.6	47.6	52.6	57.6	73.5	80.9	89.6	99.6	315
					13.7	14.6	15.6	16.6	20.1	21.7	23.4	25.4	27.6	29.8	36.7	39.9	43.6	48.6	53.6	58.5	74.6	82.1	90.7	100.8	355
						15.5	16.5	17.4	21.1	22.7	24.4	26.4	28.6	30.8	37.8	41.0	44.7	49.7	54.7	59.7	75.9	83.4	92.0	102.1	400
							17.4	18.4	22.2	23.8	25.5	27.5	29.7	31.9	39.0	42.3	46.0	51.0	55.9	60.9	77.3	84.8	93.4	103.5	450
								19.4	23.3	24.9	26.6	28.6	30.8	33.0	40.3	43.5	47.2	52.2	57.2	62.2	78.8	86.3	94.9	104.9	500
									24.6	26.2	27.9	29.9	32.1	34.3	41.8	45.0	48.7	53.7	58.7	63.6	80.5	88.0	96.6	106.7	560
										27.6	29.5	31.5	33.7	35.9	43.5	46.7	50.5	55.4	60.4	65.4	82.5	90.0	98.6	108.7	630
											31.2	33.2	35.4	37.6	45.5	48.7	52.5	57.4	62.4	67.4	84.4	92.3	100.9	111.0	710
												35.2	37.4	39.6	47.7	51.0	54.7	59.7	64.6	69.6	87.4	94.9	103.5	113.6	800
													39.6	41.8	50.2	53.4	57.2	62.2	67.1	72.1	90.3	97.8	106.4	116.4	900
														44.0	52.7	55.9	59.7	64.6	69.6	74.6	93.2	100.6	109.3	119.3	1000
															55.7	58.9	62.6	67.6	72.6	77.6	96.6	104.1	112.7	122.8	1120
																62.2	65.9	70.9	75.8	80.8	100.3	107.8	116.4	126.5	1250
																	69.6	74.6	79.6	84.5	104.7	112.1	120.8	130.8	1400
																		79.6	84.5	89.5	110.4	117.9	126.5	136.6	1600
																			89.5	94.5	116.2	123.6	132.3	142.3	1800
																				99.4	121.9	129.4	138.0	148.1	2000
																					128.8	136.3	144.9	155.0	2240
																						143.8	152.4	162.4	2500
																							161.0	171.1	2800
																								181.5	3150

Sheet metal 0.75			Sheet metal 0.88						Sheet metal 1.00						Sheet metal 1.13						Sheet metal 1.25				
200	224	250	280	315	355	400	450	500	560	630	710	800	900	1000	1120	1250	1400	1600	1800	2000	2240	2500	2800	3150	◄B ▼H
9.1	9.6	10.2	12.1	13.0	14.0	15.2	16.4	17.7	21.0	22.9	25.1	27.6	30.4	33.2	39.8	43.8	48.3	54.3	60.4	66.4	79.4	87.8	97.6	109.0	200
	10.2	10.8	13.8	13.6	14.6	15.8	17.0	18.3	21.7	23.6	25.8	28.3	31.1	33.8	40.6	44.5	49.0	55.0	61.1	67.1	80.2	88.6	98.4	109.8	224
		11.4	14.5	14.3	15.3	16.4	17.7	19.0	22.4	24.3	26.5	29.0	31.8	34.5	41.3	45.3	49.8	55.8	61.9	67.9	81.0	89.5	99.2	110.6	250
			15.3	15.0	16.0	17.2	18.4	19.7	23.2	25.1	27.3	29.8	32.6	35.4	42.2	46.2	50.7	56.7	62.8	68.8	82.0	90.4	100.2	111.6	280
				15.9	16.9	18.1	19.3	20.6	24.2	26.1	28.3	30.8	33.6	36.3	43.3	47.2	51.8	57.8	63.8	69.9	83.1	91.6	101.3	112.7	315
					17.9	19.1	20.3	21.6	25.3	27.2	29.4	31.9	34.7	37.4	44.5	48.4	53.0	59.0	65.0	71.1	84.4	92.9	102.6	114.0	355
						20.2	21.5	22.7	26.5	28.5	30.7	33.2	35.9	38.7	45.9	49.8	54.3	60.4	66.4	72.4	85.9	94.3	104.1	115.5	400
							22.7	24.0	27.9	29.8	32.0	34.5	37.3	40.1	47.4	51.3	55.8	61.9	67.9	73.9	87.5	96.0	105.7	117.1	450
								25.3	29.3	31.2	33.4	35.9	38.7	41.4	48.9	52.8	57.3	63.4	69.4	75.4	89.1	97.6	107.4	118.7	500
									30.9	32.9	35.1	37.6	40.3	43.1	50.7	54.6	59.1	65.2	71.2	77.3	91.1	99.5	109.3	120.7	560
										34.8	37.0	39.5	42.3	45.0	52.8	56.7	61.3	67.3	73.3	79.4	93.4	101.8	111.6	123.0	630
											39.2	41.7	44.5	47.2	55.2	59.1	63.7	69.7	75.7	81.8	96.0	104.4	114.2	125.6	710
												44.2	47.0	49.7	57.9	61.9	66.4	72.4	78.5	84.5	98.9	107.4	117.1	128.5	800
													49.7	52.5	61.0	64.9	69.4	75.4	81.5	87.5	102.1	110.6	120.4	131.8	900
														55.3	64.0	67.9	72.4	78.5	84.5	90.5	105.4	113.9	123.6	135.0	1000
															67.6	71.5	76.0	82.1	88.1	94.1	109.3	117.8	127.5	138.9	1120
																75.4	80.0	86.0	92.0	98.1	113.5	122.0	131.8	143.1	1250
																	84.5	90.5	96.6	102.6	118.4	126.9	136.6	148.0	1400
																		96.6	102.6	108.6	124.9	133.4	143.1	154.5	1600
																			108.6	114.7	131.4	139.9	149.6	161.0	1800
																				120.7	137.9	146.4	156.2	167.5	2000
																					145.7	154.2	164.0	175.3	2240
																						162.7	172.4	183.8	2500
																							182.2	193.6	2800
																								204.9	3150

SPIRAL LOCK SEAM PIPE, ROUND, ACC. TO DIN EN12237

DN	71	80	90	100	112	125	140	150	160	180	200	224	250	280	300	315	355	400	450	500	560	600	630	710	800	900	1000	1120	1250
Pipe outer-Ø [mm]	75	84	94	105	117	130	145	155	165	185	205	229	255	285	307	322	362	407	457	507	567	609	639	719	810	1012	1012	1132	1262
Sheet thickness [mm]	0.4	0.4	0.4	0.6	0.6	0.6	0.6	0.6	0.6	0.6	0.6	0.6	0.6	0.6	0.8	0.8	0.8	0.8	0.8	0.8	0.8	1.0	1.0	1.0	1.0	1.0	1.2	1.2	1.2
Pipe weight empty [kg/m]	0.8	0.9	1.0	1.7	1.9	2.1	2.4	2.6	2.7	3.1	3.4	3.8	4.2	4.7	5.2	7.1	8.0	9.0	10.2	11.3	12.6	13.5	17.7	20.0	22.5	25.4	34.9	39.1	43.7

The weights listed above are reference values. The weights can deviate, depending on the sheet metal thickness and type of flange used.

Ventilation duct clamp LGS

OVERVIEW

LGS

Properties:

Material	Steel DX51D+Z 275 NA-C (material no. 1.0226+Z) acc. to DIN EN 10327
Zinc plating	Sendzimir zinc plated, approx. 20 µm
Connecting nut	Resistance welded, domed nut M 8/ M 10. SW 13
Locking screw	Oval head screw with combination recessed head
Sound insulation insert	Material: SBR/EPDM; chlorine-free; silicone-free
Sound insulation	for DIN 4109
Temperature range	-50° to +110°C
Hardness	45 ± 5° Shore A
Fire behavior	DIN 4102: class B2

DESCRIPTION

- Two-piece pipe clamp with sound insulation insert.
- Connecting nut with combination thread M 8/M 10.

Advantages / Benefits

- Simple installation due to large opening angle.
- Locking screw with large combination recessed head is secured against loss.
- Stable sound insulation insert for firm fit.
- Better adaptation to different pipe cross sections due to 2 locking screws.
- From 450 mm diameter installation with two threaded rods on sides is possible.

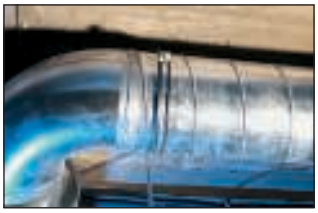

INSTALLATION

Installation tip

- Insert pipe, screw clamp parts together.

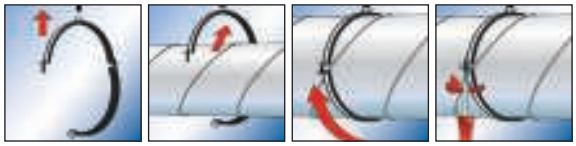

Standard installation from LGS 80 to LGS 1250

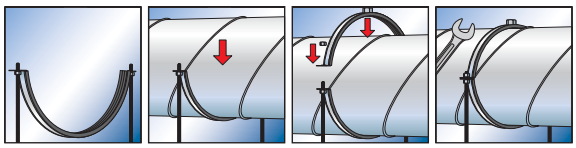

Two rods possible installation from LGS 450 to LGS 1250

Ventilation duct clamp LGS

TECHNICAL DATA

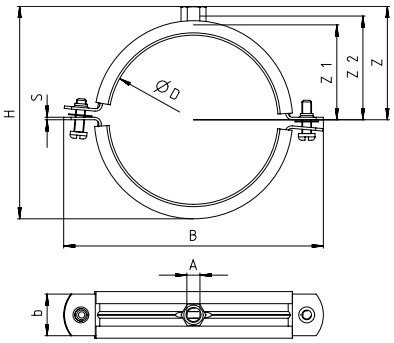

LGS

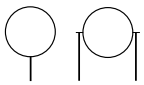

Type	Art. No.	Qty. per box	Max. recom. static load single rod installation	Max. recom. static load two rods installation	Size	Locking screw	Thread	Connecting nut height	Width x thickness clamp band	Width	Height	Height	Height	Height
					Ø D		A		b x s	B	H	Z	Z_1	Z_2
		pcs.	[kN]	[kN]	[mm]			[mm]	[mm]	[mm]	[mm]	[mm]	[mm]	[mm]
LGS 80	**079491**	25	0.6		80	M 6	M 8 / M 10	17	25 x 1.5	124	106	62	45	55
LGS 90	**079492**	25	0.6		90	M 6	M 8 / M 10	17	25 x 1.5	134	120	69	52	62
LGS 100	**079493**	20	0.6		100	M 6	M 8 / M 10	17	25 x 1.5	145	131	74	57	67
LGS 112	**079494**	20	0.6		112	M 6	M 8 / M 10	17	25 x 1.5	157	143	80	63	73
LGS 125	**079495**	10	0.6		125	M 6	M 8 / M 10	17	25 x 1.5	170	157	87	70	80
LGS 140	**079496**	10	0.6		140	M 6	M 8 / M 10	17	25 x 1.5	185	168	93	76	86
LGS 150	**079497**	10	0.6		150	M 6	M 8 / M 10	17	25 x 1.5	195	180	99	82	92
LGS 160	**079498**	10	0.6		160	M 6	M 8 / M 10	17	25 x 1.5	205	192	104	87	98
LGS 180	**079499**	10	0.6		180	M 6	M 8 / M 10	17	25 x 1.5	225	211	114	97	107
LGS 200	**079500**	15	0.6		200	M 6	M 8 / M 10	17	25 x 1.5	245	230	123	106	117
LGS 224	**079501**	15	0.6		224	M 6	M 8 / M 10	17	25 x 1.5	269	257	137	120	130
LGS 250	**079502**	10	0.6		250	M 6	M 8 / M 10	17	25 x 1.5	295	253	135	118	128
LGS 280	**079503**	10	0.6		280	M 6	M 8 / M 10	17	25 x 1.5	325	311	164	147	157
LGS 300	**079504**	10	0.6		300	M 6	M 8 / M 10	17	25 x 1.5	347	325	171	154	164
LGS 315	**079505**	10	0.6		315	M 6	M 8 / M 10	17	25 x 1.5	362	345	181	164	174
LGS 355	**079506**	10	0.6		355	M 6	M 8 / M 10	17	25 x 1.5	402	381	199	182	192
LGS 400	**079507**	10	0.6		400	M 6	M 8 / M 10	17	25 x 1.5	447	431	224	207	217
LGS 450*	**024637**	1	0.8	1.6	450	M 10	M 8 / M 10	17	25 x 2.5	497	480	249	232	242
LGS 500*	**024638**	1	0.8	1.6	500	M 10	M 8 / M 10	17	25 x 2.5	547	526	272	255	265
LGS 560*	**024639**	1	0.8	1.6	560	M 10	M 8 / M 10	17	25 x 2.5	607	594	306	289	299
LGS 600*	**024640**	1	0.8	1.6	600	M 10	M 8 / M 10	17	25 x 2.5	649	618	318	301	311
LGS 630*	**024641**	1	0.8	1.6	630	M 10	M 8 / M 10	17	25 x 3.0	679	664	341	324	334
LGS 710*	**024642**	1	0.8	1.6	710	M 10	M 8 / M 10	17	25 x 3.0	759	743	380	363	373
LGS 800*	**024643**	1	0.8	1.6	800	M 10	M 8 / M 10	17	25 x 3.0	850	833	425	408	418
LGS 900*	**024644**	1	0.8	1.6	900	M 10	M 8 / M 10	17	30 x 3.0	950	939	478	461	471
LGS 1000*	**024645**	1	0.8	1.6	1000	M 10	M 8 / M 10	17	30 x 3.0	1052	1053	535	518	528
LGS 1120*	**024646**	1	0.8	1.6	1120	M 10	M 8 / M 10	17	30 x 3.0	1172	1174	595	578	589
LGS 1250*	**024647**	1	0.8	1.6	1250	M 10	M 8 / M 10	17	30 x 3.0	1302	1319	668	651	661

* Installation with two rods on side is possible.

Duct hanger L- and Z-type

OVERVIEW

LKHN

LKH

ZKHN

ZKH

Properties:

Material	Steel DD11 (material no. 1.0332) acc. to DIN EN 10111
Zinc plating	LKH/ ZKH: Electro zinc plated, min. 3 µm LKHN/ ZKHN: Electro zinc plated, min. 8 µm
Sound insulation	for DIN 4109
Temperature range	-50° to +110 °C
Hardness	45 ± 5° Shore A
Fire behavior	DIN 4102: class B2

DESCRIPTION

- Fastening component with sound insulation part in riveted and inserted design.

Advantages / Benefits

- Multiple holes for simple and quick fastening with drilling screws or rivets.
- Decrease in vibration and streaming noises.
- High stability with the riveted version.
- High stability with the riveted version.
- Simple alignment and level adjustment.

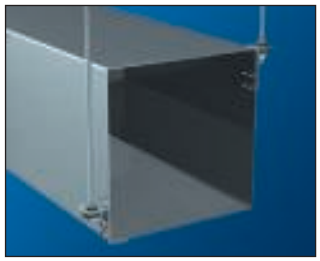

INSTALLATION

Installation tips

- Fastening with self tapping screws or rivets.
- Suspension using threaded rods.

TECHNICAL DATA

LKHN

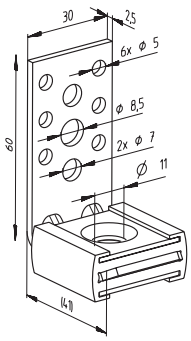

LKH

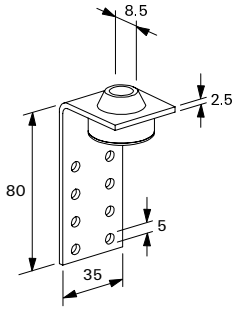

ZKHN

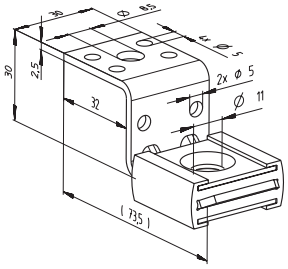

ZKH

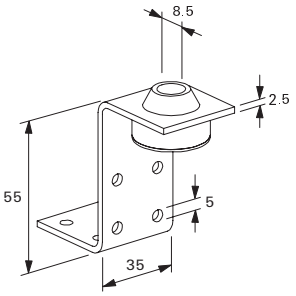

Type	Art. No.	Qty. per box	Max. recom. static load (centr. tension) $N_{recom.}$	Version	for thread
		pcs.	[kN]		Ø
LKHN	**516537**	50	0.90	-	-
LKH	**024671**	50	0.50	inserted	M 8
ZKHN	**516540**	50	0.90	-	-
ZKH	**024674**	50	0.50	inserted	M 8

Spiral duct hanger LRBN / LRB

OVERVIEW

LRB

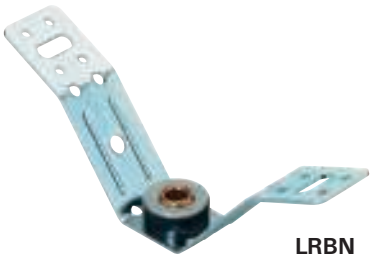

LRBN

Properties:

Material	Steel DD11 (material no. 1.0332) acc. to DIN EN 10111
Zinc plating	LRB: Electro zinc plated, mind. 3 µm LRBN: Electro zinc plated, mind. 8 µm
Sound insulation	for DIN 4109
Temperature range	-50° to +110°C
Hardness	45 ± 5° Shore A
Fire behavior	DIN 4102: class B2

DESCRIPTION

- Fastening component with sound insulation part in riveted and inserted design.

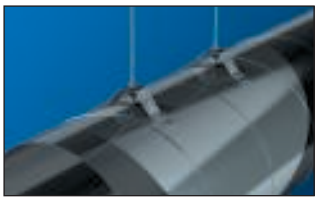

Advantages / Benefits

- Multiple holes for simple and quick fastening with drilling screws or rivets.
- Decrease in vibration and streaming noises.
- High stability with the riveted Version.
- Alternative usage possibility as sound uncoupling profile hanger.
- Ideal adaptation due to target bending point.
- Simple alignment and level adjustment.

INSTALLATION

Installation tips

- Fastening with drilling screws or rivets.
- Suspension using threaded rods.

TECHNICAL DATA

LRB

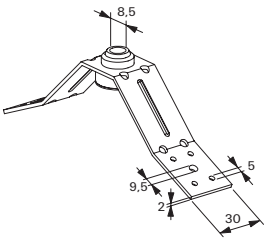

LRBN

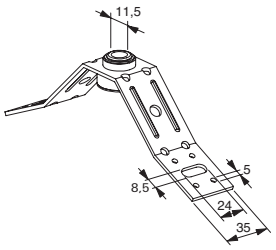

Type	Art. No.	Qty. per box pcs.	Max. recom. static load (centr. tension) $N_{recom.}$ [kN]	Version	for thread
LRB	**024675**	50	0.50	inserted	M 8
LRBN	**077613**	50	0.90	riveted	M 8 / M 10

Rubber inlay EMS

OVERVIEW

EMS

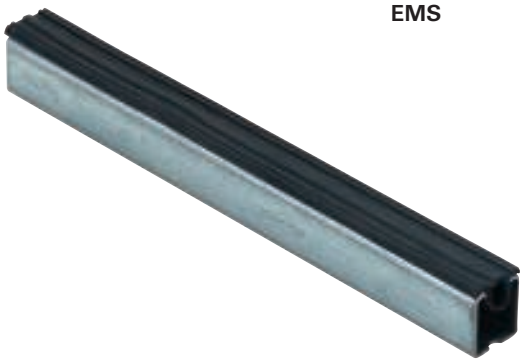

Properties:

Sound insulation insert	Material: SBR/EPDM; chlorine-free; silicone-free
Sound insulation	special noise-absorbing lining
Temperature range	-50° to +110°C
Hardness	45 ± 5° Shore A
Fire behavior	DIN 4102: class B2

DESCRIPTION

- Profile rubber insert to place in mounting rails.
- Sound insulation for threaded rods.

Advantages / Benefits

- Sound decoupling and insulation between components.
- No noise bridges.

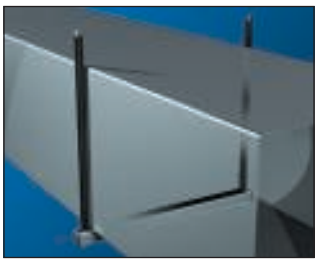

INSTALLATION

Installation tips

- Simple insertion in the mounting rail MS and FUS rails.
- Threaded rods can be slided easily into the profile.

TECHNICAL DATA

EMS

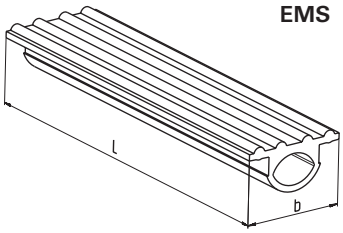

Type	Art. No.	Qty. per box	For profile	For threaded rod up to	Length L	b
		pcs.			[m]	[mm]
EMS 27	**024664**	1	27/18 + 28/30	M 8	25	27
EMS 38	**024665**	1	38/40 + 40/60	M 12	25	38
EMS 41	**550806**	1	all FUS channels	M 14	6	41

Profile hanger TZ / TZH

OVERVIEW

TZ

TZH

Properties:

Material	DX51D+Z 140-275, (material no. 1.0226+Z) acc. to DIN EN 10327
Zinc plating	Electro zinc plated, ≥ 8 µm

VdS

DESCRIPTION

- Fastening element for trapezoidal sheeting available in two Versions.

Advantages / Benefits

- Easy adaptation to any trapezoidal sheeting shape due to target bending points.
- Simple post level adjustment with the TZH due to regulating nuts.

INSTALLATION

Installation tips

- Hole punching in trapezoidal sheeting using hole punch LZ.
- Fastening with a screw SKS M8x100 or fastening with sheet metal screws or steel blind rivets is recommended.
- For mounting sprinkler systems, the use of sheet metal screws or steel blind rivets is not permitted.

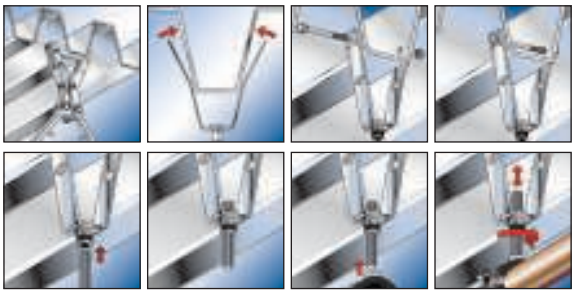

TECHNICAL DATA

TZ

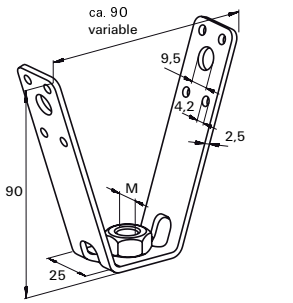

TZH

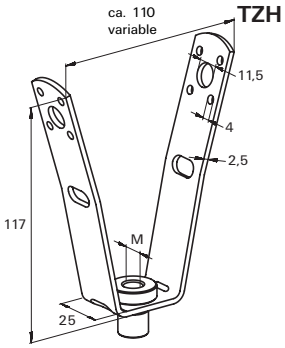

Type	Art. No.	Qty. per box	Thread	Max. recom. static load (centr. tension)
		pcs.	M	$N_{recom.}$ [kN]
TZ M 8	**064094**	25	M 8	0.80
TZH M 8	**079825**	25	M 8	1.30
TZ M 10	**064095**	25	M 10	0.80
TZH M 10	**079826**	25	M 10	1.30

Hole punch LZ, hole stamp LST

OVERVIEW

LZ

LST

DESCRIPTION

- Tool for punching holes in trapezoidal sheeting.

TECHNICAL DATA

LST

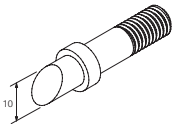

Type	Art. No.	Qty. per box	Trapezodial sheeting thickness
		pcs.	[mm]
LZ	**079830**	1	1.25
LST 10	**079829**	2	–

Hexagonal screw SKS

SKS

Type	Art. No.	Qty. per box	Thread	Width across nut
		pcs.	D	SW
SKS M 8 x 100	**079827**	100	M 8	13

Codes and characteristics see on page 135.

Accessories

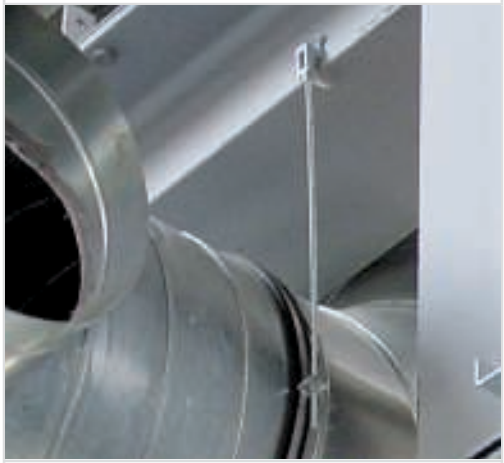

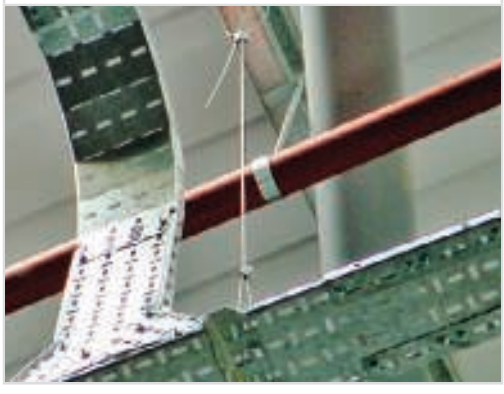

The accessories range allows several kind of connection possibilities together with fischer pipe clamps and installation system MS-L, MS and FUS.

Base plate
GPL, GPS **Page 128**

Steel work connectors
TKL **Page 129**

Level adjustment
SPS / BLR **Page 133**

Threaded connectors
G / GS **Page 130**

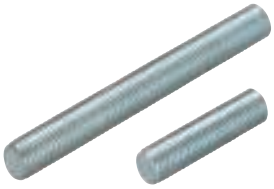

Straps
GWB **Page 143**

Wireclip
WIC **Page 146**

GPR **Page 128**

SS-TKL **Page 129**

PV **Page 133**

AHB **Page 134**

MU / U **Pages 135 / 136**

RD / RDM / GRD / VM **Pages 136 / 138**

SKS **Page 135**

STST **Page 141**

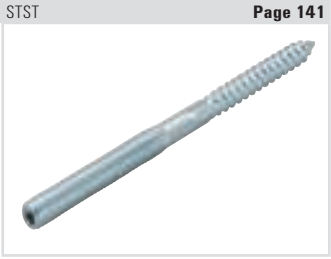

LBV **Page 142**

LBK **Page 142**

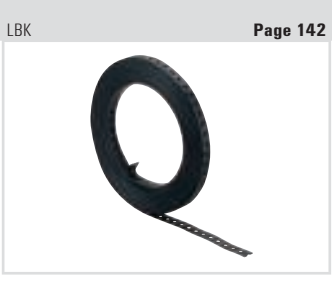

ED / SZE **Page 143**

WI **Page 146**

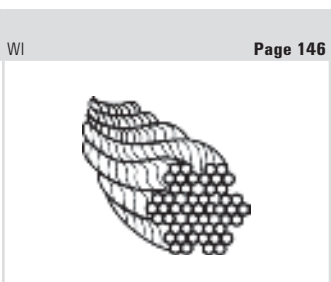

WIZ **Page 146**

Base plate GPL

OVERVIEW

GPL, GPS

GPR

Properties:

Material	Steel DD11 (material no. 1.0332) acc. to DIN EN 10111
Zinc plating (GPL, GPS)	Electro zinc plated, min. 8 µm

DESCRIPTION

- Base plate in light, heavy and round design, with welded threaded nut.

Advantage / Benefit

- Slots make simple alignment possible.

INSTALLATION

- During wall stand-off-installation, the permissible bending moment and the maximum load on the base plate must be observed.

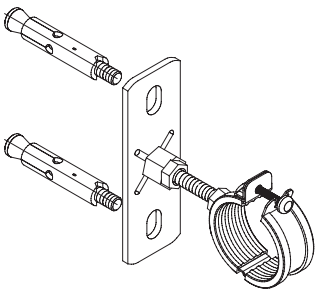

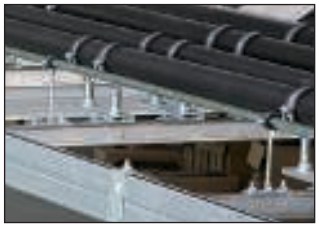

TECHNICAL DATA

GPL, GPS

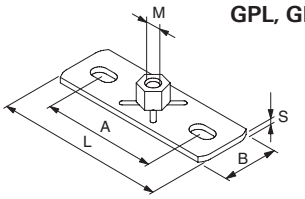

GPR

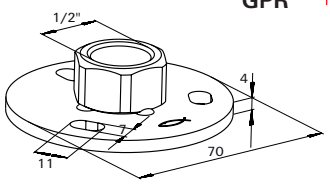

Type	Art. No.	Qty. per box	Thread	Length	Width	Hole spacing	Long slot	Thickness
		pcs.	M	L [mm]	B [mm]	A [mm]	(LL a x b) [mm]	S [mm]
GPL								
GPL M 8	**079665**	25	M 8	80	30	54	9 x 16	3
GPL M 10	**079666**	25	M 10	80	30	54	9 x 16	3
GPL 1/2"	**079667**	25	1/2"	80	30	54	9 x 16	3
GPS								
GPS M 10	**079671**	25	M 10	120	40	79	11 x 19	4
GPS M 12	**040398**	25	M 12	120	40	79	11 x 19	4
GPS M 16	**504408**	25	M 16	120	40	79	11 x 19	4
GPS 1/2"	**079672**	25	1/2"	120	40	79	11 x 19	4
GPS 3/4"	**020968**	25	3/4"	120	40	79	11 x 19	4
GPR								
GPR 1/2"	**037289**	25	1/2"	-	-	-	11 x 7	4

LOADS

Type	Max. rec. static load (tension) N_{rec} [kN]
GPL M 8	2.4
GPL M 10	2.4
GPL 1/2"	2.4
GPS M 10	4.0
GPS M 12	4.0
GPS M 16	4.0
GPS 1/2"	4.0
GPS 3/4"	4.0
GPR 1/2"	4.0

Clamp hanger TKL

OVERVIEW

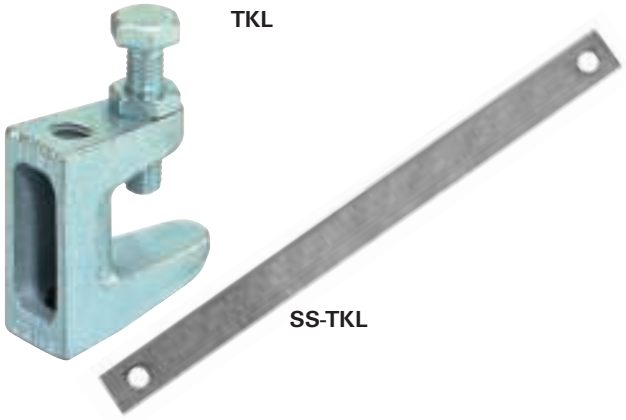

Properties:

Material TKL	TKL: Malleable cast iron EN-GJMB-350-10 acc. to DIN 1562 Bolt: Steel 8.8 acc. ISO 4017 Nut: Steel acc. ISO 4035, resistance min. 4
Material SS-TKL	Steel DX51D acc. to EN 10214, material no. 1.0226
Zinc plating	Electro zinc plated, min. 5 µm

VdS

DESCRIPTION

- Clamp hanger makes simple fastening possible by clamping to steel beams.

Advantages / Benefits

- High load-bearing capability.
- Simple and fast level adjustment.
- Level adjustment is also possible later with through-hole.
- VdS approval.
- Fastening on steel beam without welding and drilling.
- No slipping of the clamp from the steel beam.

INSTALLATION

Installation tip

- SS-TKL necessary for VdS systems starting from pipe > DN 65.

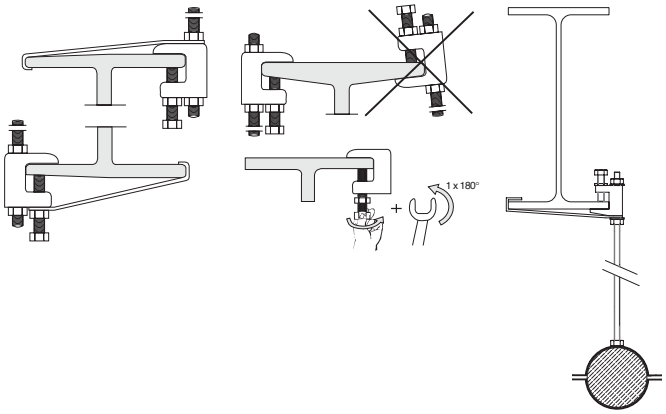

TECHNICAL DATA

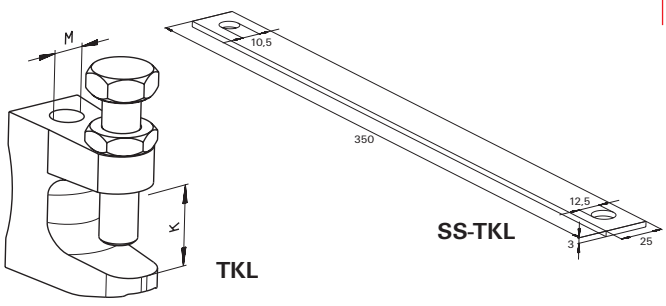

Type	Art. No.	Qty. per box	Clamping range	Eye Ø	Stamp on item
		pcs.	K [mm]	D	
TKL L M8	**064055**	50	0 - 18	M 8	TK M 8
TKL M8	**079687**	50	0 - 23	M 8	TK 10
TKL Ø 9	**077605**	50	0 - 18	9	TK N 8
TKL M10	**079688**	50	0 - 20	M 10	TK N 10
TKL Ø 11	**079689**	50	0 - 20	11	TK N 10
TKL M12	**020949**	50	0 - 26	M 12	TK 12
TKL Ø 13	**043275**	50	0 - 26	13	TK 12
SS-TKL M10/M12	**048154**	25	-	10/12	SS-TKR

LOADS

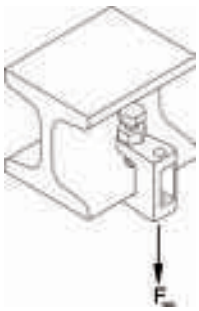

Type	Hole-Ø	Max. recom. static load (tension) $N_{recom.}$
TKL L M8	M8	1.20
TKL M8	M8	2.50
TKL Ø 9	Ø 9	1.20
TKL M10	M10	2.50
TKL Ø 11	Ø 11	2.50
TKL M12	M12	3.50
TKL Ø 13	Ø 13	3.50

Threaded rod G / Threaded stud GS

OVERVIEW

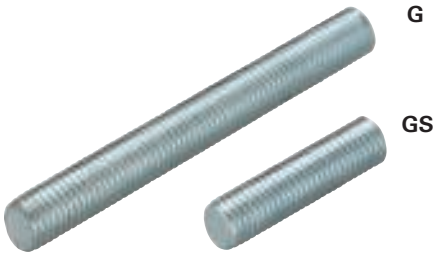

Properties threaded rod G:

Material (G 6 - G 24)	DIN 976 Steel 4.6 acc. to DIN EN ISO 898-1
Material (G 1/2" - G 3/4")	Steel S235 JR (material no. 1.0037) acc. to DIN EN 10025
Zinc plating	Electro zinc plated, 3 - 8 µm

Properties threaded stud GS:

Material	DIN 976 Steel 4.6 acc. to DIN EN ISO 898-1
Zinc plating	Electro zinc plated, 3 - 8 µm

TECHNICAL DATA

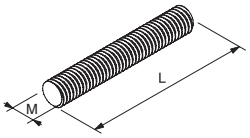

Type	Art. No.	Qty. per box pcs.	Length L [mm]	Thread M
Threaded rod G				
G 6	**020956**	50	1000	M 6
G 8	**079740**	25	1000	M 8
G 10	**079744**	25	1000	M 10
G 12	**020957**	20	1000	M 12
G 16	**020958**	10	1000	M 16
G 20	**557295**	5	1000	M 20
G 24	**557270**	5	1000	M 24
G 8/2	**079741**	25	2000	M 8
G 10/2	**079745**	25	2000	M 10
G 12/2	**579746**	25	2000	M 12
G 10/3	**557092**	5	3000	M 10
G 12/3	**064056**	5	3000	M 12
G 1/2"	**064093**	10	2000	1/2"
G 3/4"	**077580**	5	2000	3/4"
Threaded stud GS				
GS 8/25	**079750**	100	25	M 8
GS 8/40	**079751**	100	40	M 8
GS 8/50	**079752**	100	50	M 8
GS 8/60	**079753**	100	60	M 8
GS 8/70	**079754**	100	70	M 8
GS 8/80	**079755**	100	80	M 8
GS 8/100	**079757**	100	100	M 8
GS 8/150	**079758**	50	150	M 8
GS 8/200	**079759**	50	200	M 8
GS 10/25	**079765**	100	25	M 10
GS 10/40	**079766**	100	40	M 10
GS 10/60	**079767**	100	60	M 10
GS 10/80	**079768**	100	80	M 10
GS 10/100	**079769**	100	100	M 10
GS 10/120	**079770**	50	120	M 10
GS 10/150	**079771**	50	150	M 10
GS 10/200	**079772**	50	200	M 10
GS 12/40	**091442**	100	40	M 12
GS 12/60	**091443**	100	60	M 12
GS 12/80	**091444**	100	80	M 12
GS 12/100	**091461**	100	100	M 12
GS 12/120	**091462**	50	120	M 12
GS 12/150	**091463**	50	150	M 12
GS 12/200	**091464**	50	200	M 12

Load and bend values for threaded rods

RECOMMENDED LOAD

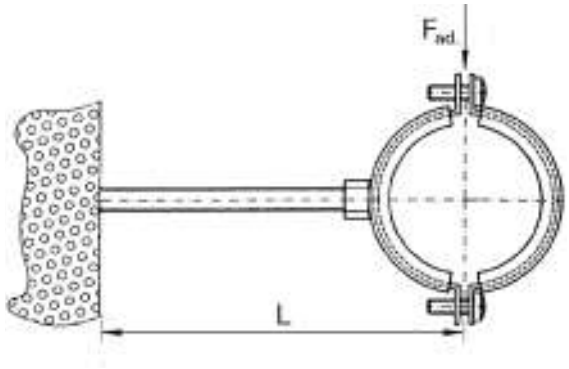

Maximum deflection under load: f_{max} = < 3 mm
Permissible steel tension: $\sigma_{ad.}$ = 160 N/mm²

When fastening with fixings, the permissible bending moment has to be taken into consideration!

THREADED RODS (4.6)

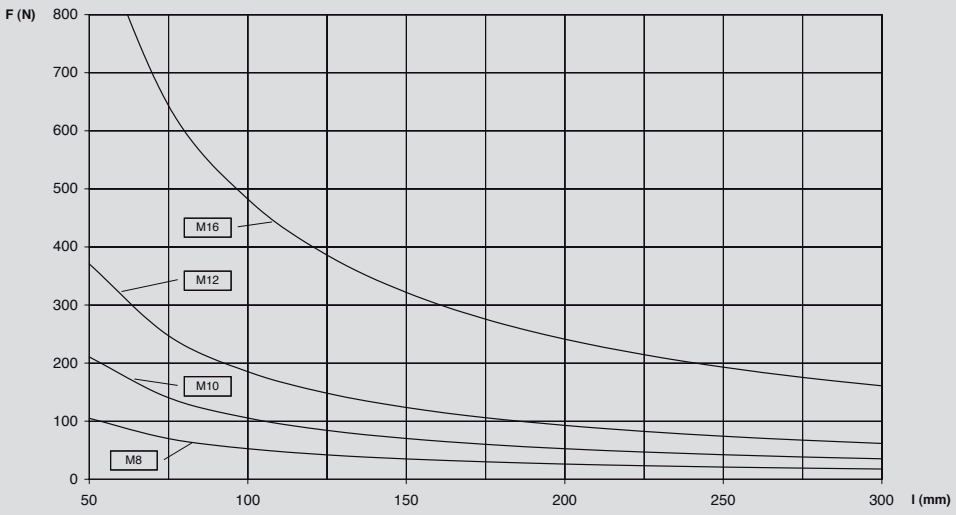

THREADED PIPES

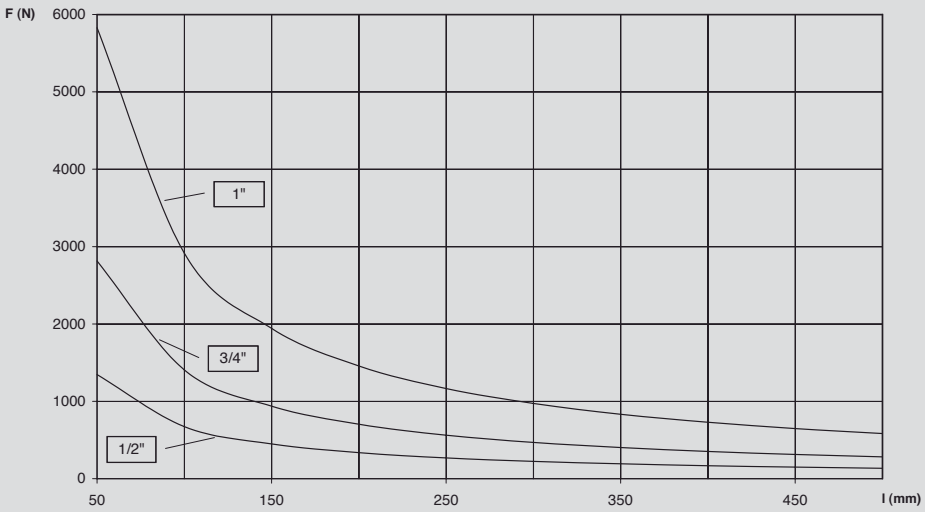

The permissible load of the pipe clamp is not considered!

Installation tool for stud screw HED

OVERVIEW

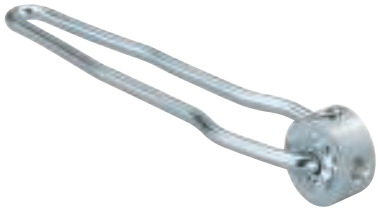

HED

DESCRIPTION

- Tool for installing stud screws
- 4 thread sizes in 1 tool

TECHNICAL DATA

Type	Art. No.	Qty. per box	Thread
		pcs.	D
HED	**079831**	1	M 6, M 8, M 10, M 12

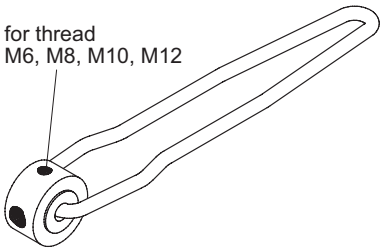

Fixing set for gas meter BFG

OVERVIEW

BFG

DESCRIPTION

- Fixing set for secure fastening of gas meters.

Advantage / Benefit

- Complete fixing set with fixing according to TRGI.

TECHNICAL DATA

Type	Art. No.	Qty. per box	Fixing set consisting of
		pcs.	
BFG 200	**45500**	1	2 x Cantilever bracket 27/18/200, 2 x cover cap AK 27/18 2 x FHS Clix 8x30, 2 x FRS Plus 32-37 4 x Hexagonal bolt 8x70, 4 x washer 8,4 4 x FMD 8x60

Parallel connector PV

OVERVIEW

PV

Properties:

Material	diecasting

DESCRIPTION

- Simple and quick connector for extending and/or connecting threaded rods.

Advantages / Benefits

- Fast installation.
- Simple level adjustment possible.
- Level adjustment even in installed position.

INSTALLATION

Installation tip

- Hold threaded parts together, slide parallel connector over.
- Secure using lock nut.
- Level adjustment is possible by turning the threaded rod.

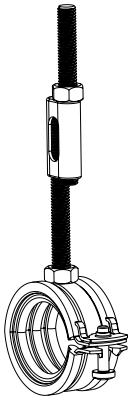

TECHNICAL DATA

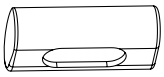

Type	Art. No.	Qty. per box pcs.	for thread
PV M 6	**020947**	100	M 6
PV M 8	**079678**	100	M 8

LOADS

Type	Max. recom. static load (centr. tension) $N_{recom.}$ [kN]
PV M 6	0.30
PV M 8	2.00

Turnbuckle SPS and Bolt left-hand/right-hand BLR

OVERVIEW

SPS

BLR

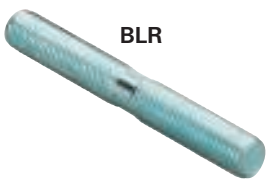

Properties:

Material SPS	Steel ≥ 330 N/mm² acc. to DIN 1480
Material BLR	Steel acc. to DIN 976, resistance 4.6
Zinc plating	Electro zin plated, min. 5 µm

TECHNICAL DATA

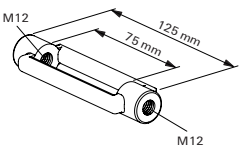

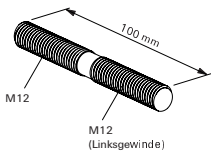

Type	Art. No.	Qty. per box pcs.	Length L [mm]	Thread M
SPS M 12	**064090**	25	125	M 12
BLR 100	**064091**	25	100	M 12

LOADS

Type	Max. recom. static load (tension) [kN]
SPS M 12	9.3
BLR 100	9.0

Support hanger AHB

OVERVIEW

AHB

Properties:

Material	Steel DD11 (material no. 1.0332) acc. to DIN EN 10111
Zinc plating	Electro zinc plated, min. 5 µm

DESCRIPTION

- Component for level adjustment.
- Due to the stamped opening, a component can be hung simply using threaded rod and nut and adjusted.

Advantages / Benefits

- Components can be aligned precisely and construction dimension tolerances can be compensated.

INSTALLATION

Installation tip

- If threaded rods of size M8 are used, a washer should be used.

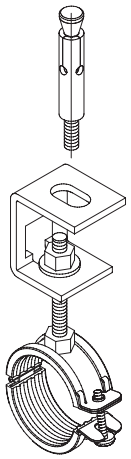

TECHNICAL DATA

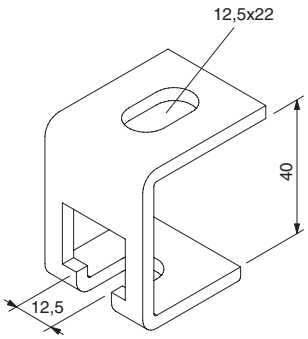

Type	Art. No.	Qty. per box	For thread	Adjustable height
		pcs.		[mm]
AHB	**79675**	25	M8, M10, M12	36

LOADS

Type	Max. recom. static load (centr. tension) $N_{recom.}$ [kN]
AHB	1.20

Hexagonal screw SKS

OVERVIEW

SKS

Properties:

Zinc plating	Electro zinc plated, 3 - 8 µm

acc. DIN-EN-ISO 4017, steel 8.8

TECHNICAL DATA

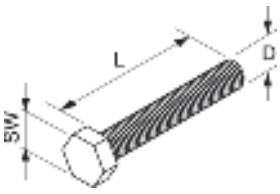

Type	Art. No.	Qty. per box	Length	Thread	Width across nut
		pcs.	L [mm]	D	SW
SKS 6 x 20	**079711**	100	20	M 6	10
SKS 8 x 16	**079415**	100	16	M 8	13
SKS 8 x 30	**079713**	100	30	M 8	13
SKS 8 x 45	**079714**	100	45	M 8	13
SKS 8 x 55	**079715**	100	55	M 8	13
SKS 8 x 100	**079827**	100	100	M 8	13
SKS 10 x 20	**079416**	100	20	M 10	17
SKS 10 x 30	**079417**	100	30	M 10	17
SKS 10 x 55	**079721**	100	55	M 10	17
SKS 10 x 85	**505552**	100	85	M 10	17
SKS 12 x 20	**077610**	100	20	M 12	19
SKS 12 x 55	**077611**	100	55	M 12	19
SKS 12 x 85	**505553**	100	85	M 12	19

Washer U

OVERVIEW

U

Properties:

Material	Steel DD11 (material no. 1.0139) acc. to DIN EN 10111
Zinc plating	Electro zinc plated, min. 3 µm

TECHNICAL DATA

Type	Art. No.	Qty. per box	Thickness	External Ø	Hole Ø
		pcs.	S [mm]	A [mm]	[mm]
U 6 x 24	**020939**	200	2	24	6.4
U 8 x 17	**091477**	100	1.6	17	8.4
U 8 x 28	**079725**	100	2	28	8.4
U 8 x 40	**079729**	100	3	40	8.4
U 10 x 21	**091478**	100	2	21	10.5
U 10 x 28	**079726**	100	2	28	10.5
U 10 x 40	**079730**	100	3	40	13
U 12 x 24	**557301**	100	2,5	24	13
U 12 x 40	**024649**	100	3	40	16.5
U 16 x 30	**557303**	50	3	30	16.5

Hexagonal nut MU

OVERVIEW

MU

Properties:

Material	acc. DIN EN 20898-2; min. strength category 04
Zinc plating	Electro zinc plated, min. 5 µm

According DIN 934

TECHNICAL DATA

Type	Art. No.	Qty. per box	Thread	Width across nut
			D	SW
		pcs.	[mm]	
MU M 6	**079733**	100	M 6	10
MU M 8	**079734**	100	M 8	13
MU M 10	**079735**	100	M 10	17
MU M 12	**024650**	100	M 12	19
MU M 16	**557297**	50	M 16	24

Hexagonal connector VM

OVERVIEW

VM

Properties:

Material	SAE 1008 (material no. 1.9325) acc. to DIN EN 10263-2
Zinc plating	Electro zinc plated, 3 - 8 µm

INSTALLATION

TECHNICAL DATA

Type	Art. No.	Qty. per box	Length	Thread	Width across nut
			L	D	SW
		pcs.	[mm]	[mm]	
VM M 6	**014319**	100	25	M 6	10
VM M 8	**079690**	100	30	M 8	11
VM M 10	**079691**	100	30	M 10	13
VM M 12	**020971**	100	40	M 12	17
VM M 12 S*	**077623**	100	30	M 12	17
VM M16	**508833**	50	40	M 16	24

* with two safety side holes

LOADS

Type	Max. recom. static load (tension)
	$N_{recom.}$
	[kN]
VM M 6	6.0
VM M 8	8.3
VM M 10	10.0
VM M 12	13.0
VM M 12 S*	-

Eyebolt AG

OVERVIEW

AG

Properties:

Material	Steel S235 JR (material no. 1.0037) acc. to DIN EN 10025
Zinc plating	Electro zinc plated, 3 - 8 µm

TECHNICAL DATA

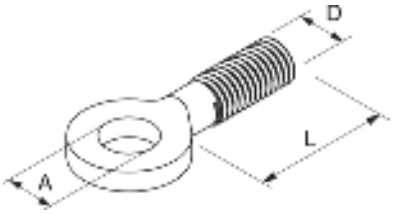

Type	Art. No.	Qty. per box	Length L	External thread D	Eye Ø A
		pcs.	[mm]		[mm]
AG 8 x 25	**079696**	100	25	M 8	8.5
AG 10 x 25	**079697**	100	25	M 10	10.5

LOADS

Type	Max. recom. static load (tension) $N_{recom.}$ [kN]
AG 8 x 25	5.0
AG 10 x 25	8.0

Thread hanger RAH

OVERVIEW

RAH

Properties:

Material	Annealed cast iron GJMB 350-10 acc. to DIN 1562
Zinc plating	Electro zinc plated, 3 - 8 µm

TECHNICAL DATA

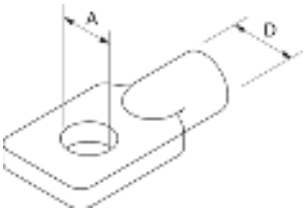

Type	Art. No.	Qty. per box	Internal thread D	Eye Ø A
		pcs.		[mm]
RAH M 8	**079698**	50	M 8	12.0
RAH M 10	**079699**	50	M 10	12.0

LOADS

Type	Max. recom. static load (tension) $N_{recom.}$ [kN]
RAH M 8	4.0
RAH M 10	4.0

Reduction piece RD

OVERVIEW

RD

Properties:

Material	9SMnPb28k (material no. 1.0718) acc. to DIN EN 10087
Zinc plating	Electro zinc plated, 3 - 8 µm

TECHNICAL DATA

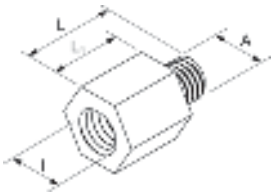

Type	Art. No.	Qty. per box	Internal thread l	External thread A	Length L1	Length L	Width across nut SW
		pcs.			[mm]	[mm]	
RD M 6 / M 8	**079694**	100	M 6	M 8	12	20	9
RD M 8 / M 6	**020936**	100	M 8	M 6	12	19	11
RD M 10 / M 8	**079692**	50	M 10	M 8	15	23	13
RD M 12 / M 10	**079693**	100	M 12	M 10	15	25	17
RD M 12 / M 16	**504397**	50	M 12	M 16	18	32	19
RD M 16 / M 12	**504399**	50	M 16	M 12	22	32	24
RD 1/2" / M 10	**079695**	10	1/2"	M 10	19	29	24

Reduction socket RDM and GRD

OVERVIEW

RDM

GRD

Properties:

Material	11SMnPb30 (material no. 1.0277) acc. to DIN EN 10277
Zinc plating	Electro zinc plated, 3 - 8 µm

TECHNICAL DATA

RDM

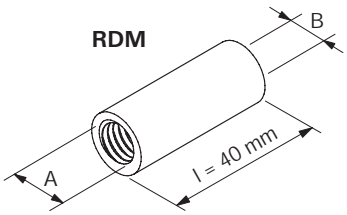

GRD

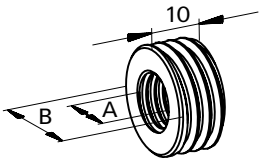

Type	Art. No.	Qty. per box	Thread A	Thread B
		pcs.		
RDM M 10 / M 8	**079413**	50	M 10	M 8
RDM M 12 / M 10	**079414**	100	M 12	M 10
GRD 1/2" / M 10	**077609**	100	M 10	1/2"
GRD 1/2" / M 12	**077608**	100	M 12	1/2"
GRD 3/4" / M 10	**077607**	100	M 10	3/4"
GRD 3/4" / M 12	**077606**	100	M 12	3/4"

Multi connector MW

OVERVIEW

MW

Properties:

Material	diecasting

DESCRIPTION

- Cube with four threaded holes for variable use.

Advantages / Benefits

- Up to 3 pipe lines can be fastened.
- One fastening point in the wall.

INSTALLATION

Installation tip

- Threaded pins and bolt connectors are suitable as connecting elements.

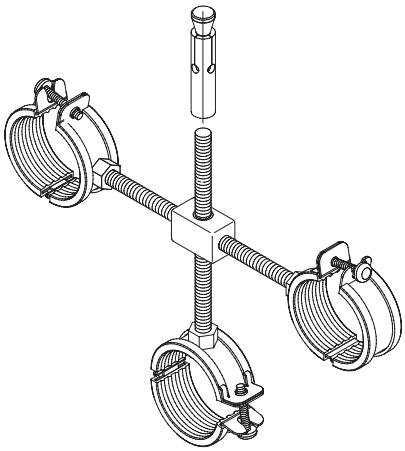

TECHNICAL DATA

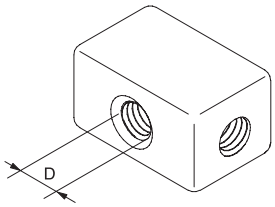

Type	Art. No.	Qty. per box	Thread D
		pcs.	
MW M 8	**079717**	50	M 8

LOADS

Type	Max. recom. static load $N_{recom.}$ [kN]
MW M 8	2.50

Flat eye screw LLS

OVERVIEW

LLS

Properties:

Material	Steel S235 JR (material no. 1.0037) acc. to DIN EN 10025
Zinc plating	Electro zinc plated, min. 5 µm

TECHNICAL DATA

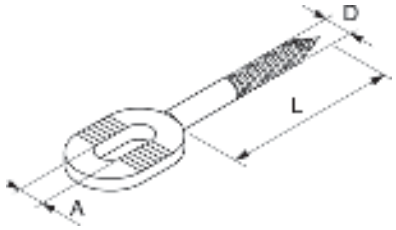

Type	Art. No.	Qty. per box pcs.	Length L [mm]	Wood thread D [mm]	Eye Ø A [mm]
LLS 6 x 50	**079700**	100	50	6	6.5
LLS 8 x 50	**079701**	100	50	8	8.5

Hexagon socket head screw IK and IM

OVERVIEW

IK

IM

Properties:

Material	Steel 18Mn84 (material no. 1.5521) acc. to DIN EN 10263
Zinc plating	Electro zinc plated, min. 5 µm

Properties:

Material	DIN 912 steel 8.8
Zinc plating	Electro zinc plated, min. 5 µm

TECHNICAL DATA

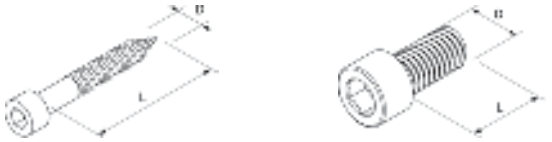

Type	Art. No.	Qty. per box pcs.	Thread D	Wood thread D [mm]	Length L [mm]	Hexagonal recess [mm]
IK 6 x 50	**079710**	100	–	6	50	–
IM 8 x 12	**079712**	100	M 8	–	12	8
IM 10 x 16	**079720**	100	M 10	–	16	6

Stud screw STST with bit head and Hex shank

OVERVIEW

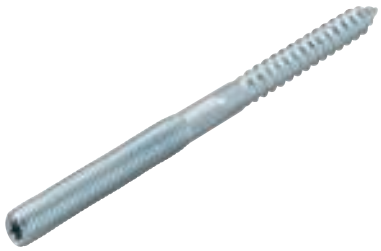

STST

Properties:

Material	Steel 4.6
Zinc plating	Electro zinc plated, min. 5 µm

DESCRIPTION

- Double thread screw for direct installation of clamps on wall.

INSTALLATION

- Insertion in the plug or in the wood wall can be done by using the Hex shank or the Torx head.

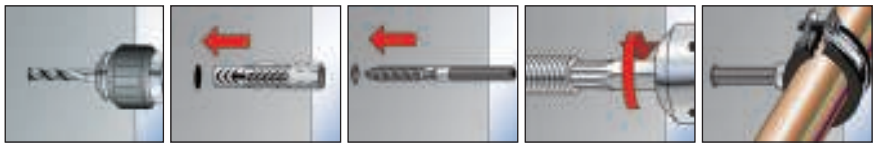

TECHNICAL DATA

Type	Art. No.	Qty. per box pcs.	Length L [mm]	Thread D [mm]	Drive
STST 6 x 60	**504400**	100	60	M 6	T15
STST 6 x 80	**077714**	100	80	M 6	T15
STST 8 x 50	**079780**	100	50	M 8	T25
STST 8 x 60	**079781**	100	60	M 8	T25
STST 8 x 80	**079782**	100	80	M 8	T25
STST 8 x 100	**079783**	100	100	M 8	T25
STST 8 x 120	**079784**	100	120	M 8	T25
STST 8 x 140	**079785**	50	140	M 8	T25
STST 8 x 180	**079786**	50	180	M 8	T25
STST 10 x 60	**077689**	100	60	M 10	T25
STST 10 x 80	**077707**	100	80	M 10	T25
STST 10 x 100	**077708**	100	100	M 10	T25
STST 10 x 120	**077709**	100	120	M 10	T25
STST 10 x 140	**077711**	50	140	M 10	T25
STST 10 x 180	**077712**	50	180	M 10	T25

Double connector plate DPP, DPF

OVERVIEW

DPP

DPF

Properties:

Material	Steel DC04 (material no. 1.0338) acc. to DIN EN 10130
Zinc plating	Electro zinc plated, min. 5 µm

DESCRIPTION

- Fastening element for installation of two parallel pipe lines with only one fastening point.

Advantages / Benefits

- Only one fastening point for two pipe lines.
- Very good for visible installation.
- Adjusting possibility due to slot.
- Variable pipe spacing with double connecting plate DPF.

TECHNICAL DATA

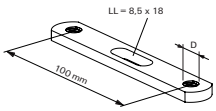

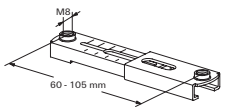

Type	Art. No.	Qty. per box pcs.	Thread distance [mm]	Thread D
DPP 65	**79702**	50	65	M 8
DPP 85	**79703**	50	85	M 8
DPP 105	**79704**	50	105	M 8
DPF 60 - 105	**24648**	50	105	M 8

LOADS

Type	Max. recom. static load $N_{recom.}$ [kN]
DPP 65	1.5
DPP 85	1.0
DPP 105	0.75
DPF 60 - 105	1.5 - 0.5

Bolt connector SBB

SBB

Properties:

Material	Steel S235 JR (material no. 1.0037) acc. to DIN EN 10025
Zinc plating	Electro zinc plated, min. 5 µm

DESCRIPTION

- Ideal connecting element for double connector plates and multi-connectors.

TECHNICAL DATA

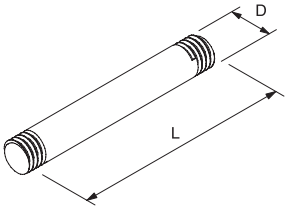

Type	Art. No.	Qty. per box pcs.	Length L [mm]	Thread D
SBB 35	**79705**	100	35	M 8
SBB 45	**79706**	100	45	M 8
SBB 55	**79707**	100	55	M 8

Textile web strapping GWB

OVERVIEW

GWB

Properties:

Material	Polypropylene yarn with polyester additive

DESCRIPTION

- Textile band for simple and load-bearing installation.

Advantages / Benefits

- Tear resistant.
- Economical, simple installation possible.
- Universal fastening possible
- Flexible length selection.

INSTALLATION

Installation tip

- Floor fastening using the fischer impact nail ED.

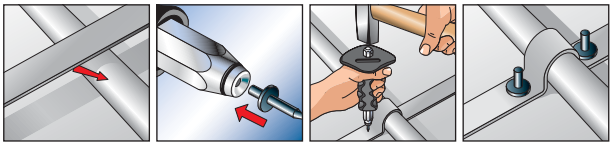

TECHNICAL DATA

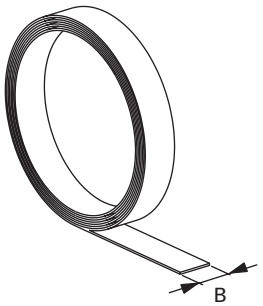

Type	Art. No.	Qty. per box pcs.	Total length l [mm]	Width B [mm]	Thickness S [mm]	to be fastend with
GWB	**20959**	10	10.000	15	1.1	ED 15, ED 18, ED 22

Perforated steel banding LBV / LBK

OVERVIEW

LBV

LBK

Properties:

Material	Steel DX51 D+Z (material no. 1.0226) acc. to DIN EN 10327
Zinc plating	sendzimir zinc plated, approx. 7 µm
Protective shroud (LBK)	PE

DESCRIPTION

- Steel band with stamped holes for simple installation, in zinc-plated or plastic coated version.

Advantages / Benefits

- Advantageous, simple installation possible.
- Universal fastening possible.
- Flexible length selection.

INSTALLATION

Installation tips

- Simple cutting to size possible with sheet metal shears.
- Floor fastening using the fischer impact nail ED.
- For ceiling suspension in concrete, the fischer nail anchor FNA is recommended.
- Fastening with fischer thread hanger RAH.

TECHNICAL DATA

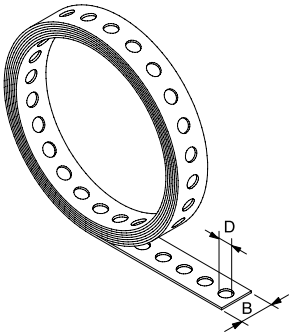

Type	Art. No.	Qty. per box pcs.	Total length l [m]	Width B [mm]	Thickness S [mm]	Eye Ø D [mm]	to be fastened with
LBV 12	**79549**	10	10	12	0.75	5	ED 15, ED 18, ED 22
LBV 17	**79550**	10	10	17	0.75	6.5	ED 15, ED 18, ED 22
LBV 25	**79551**	8	10	25	0.88	8.5	ED 15, ED 18, ED 22
LBK 14	**79553**	10	10	14	2.6	5	ED 15, ED 18, ED 22
LBK 19	**79554**	8	10	19	2.4	6.5	ED 15, ED 18, ED 22
LBK 27	**79555**	5	10	27	2.4	8.5	ED 15, ED 18, ED 22

LOADS

Type	Max. recom. static load $N_{recom.}$ [kN]
LBV 12	0.60
LBV 17	0.95
LBV 25	1.50
LBK 14	0.60
LBK 19	0.95
LBK 27	1.50

Impact nail ED

OVERVIEW

ED

Properties:

Material	Steel C60D (material no. 1.0610) acc. to EN 10016-2
Surface	Hardened; bare

DESCRIPTION

- Impact nail ED for fixing of BSM, BSMD conduit clips, LB, LBK or GWB, to concrete, without pre-drilling.

Advantages/benefits

- Simple and quick installation.
- No pre-drilling required.

INSTALLATION

Installation tips

- Knocked directly into concrete with the SZE setting tool.
- Comply with accident prevention regulations when installing.

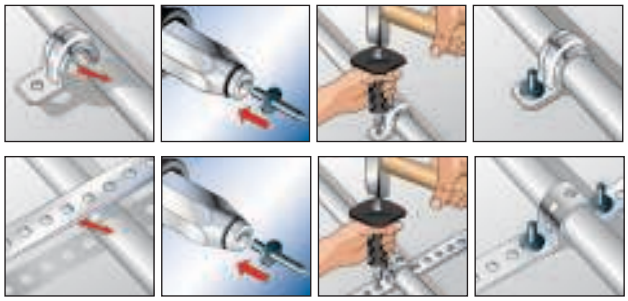

TECHNICAL DATA

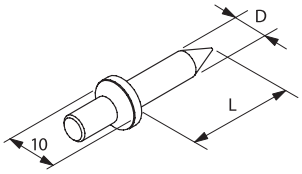

Type	Art. No.	Qty. per box pcs.	Length L [mm]	Diameter D [mm]	max. fixing thickness t_{fix} [mm]
ED 15	**48212**	200	15	4.2	2
ED 18	**79815**	200	18	4.2	6
ED 22	**14570**	200	22	4.2	10

Impact nail setting tool SZE

TECHNICAL DATA

SZE

Spareparts

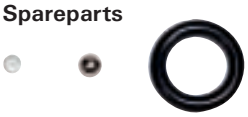

Type	Art.-No.	Qty. per box pcs.
SZE	**79820**	1
Spareparts for SZE	**49365**	4

Wireclip

OVERVIEW

WIC 2/3/4

Suitable for:
- Suspension of loads in the HVAC industries.

For suspension of:
- Lighting
- Trunking
- Busbar
- Fan coil units
- Ducting

ADVANTAGES AT A GLANCE

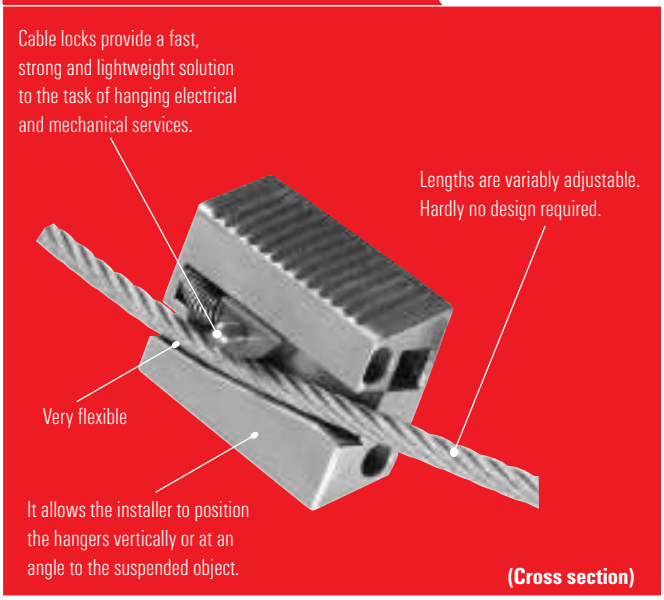

(Cross section)

DESCRIPTION

- The Wireclip Cable Lock System is designed as a fast and reliable method to suspend all static loads within the mechanical, electrical and HVAC industries.

Advantages / Benefits

- Cable locks provide a fast, strong and lightweight solution to the task of hanging electrical and mechanical services.
- Its time saving qualities have been shown to increase productivity by up to six times compared to traditional hanging methods.
- Installation requires no specialized training.
- Cable locks are made of durable metal alloys and stainless steel and combine these qualities with the strength of high tensile wire rope.
- It allows the installer to position the hangers vertically or at an angle to the suspended object.
- The Wireclip system is lightweight. It is easy to carry and reduces the risk of injury due to the accidental drop of materials during aerial installations.
- No pre-site visit required to calculate drop lengths.

Wireclip

INSTALLATION

Installation tips

- Only use the special fischer wire cutter WIZ to prevent damaged cable ends.
- Do not use for loads outside the stated range of the product.
- Do not exceed the safe working load of the product.
- Do not use on coated wire rope.
- Do not apply paint or other coating.
- Do not apply lubricant.
- Do not use for lifting.
- Keep the product clean and free from dirt.
- Remove damaged cable end prior to inserting into the cable lock.
- Do not use in chlorinated atmospheres.

Cable lock WIC 4

Cable lock WIC 2 & 3

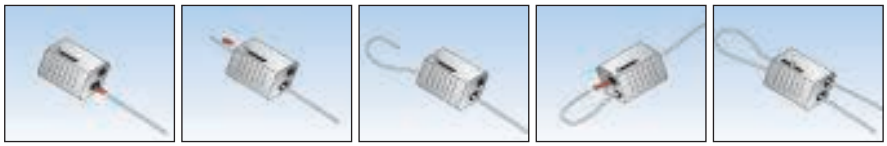

TECHNICAL DATA

WIC 2

WIC 3

WIC 4

Wire 7 x 7

WIZ

Type	Art. No.	Qty. per box	for wire diameter	Length on roll	Type
		pcs.	[mm]	[m]	
WIC 2 VE20	**44559**	20	2 - 2.5	-	-
WIC 2 VE100	**44560**	100	2 - 2.5	-	-
WIC 3 VE20	**44561**	20	2.5 - 3.5	-	-
WIC 3 VE100	**44562**	100	2.5 - 3.5	-	-
WIC 4 VE10	**44563**	10	3 – 4	-	-
WIC 4 VE50	**44564**	50	3 – 4	-	-
WI Ø 2 mm	**44565**	-	2	200	7 x 7
WI Ø 2.5 mm	**44566**	-	2.5	200	7 x 7
WI Ø 3 mm	**44567**	-	3	100	7 x 7
WI Ø 4 mm	**44568**	-	4	100	7 x 7
WIZ	**44721**	1	wire cutter for rope up to 4 mm		

Only available in Europe except U.K. and Spain.

LOADS

Recommended loads N_{rec} [kN].

Cable lock size	Wire diameter [mm]	N_{rec} [kN]
WIC 2	2	0.6
WIC 2	2.5	1.0
WIC 3	3	1.2
WIC 4	4	2.3

Installation system hot-dipped galvanised

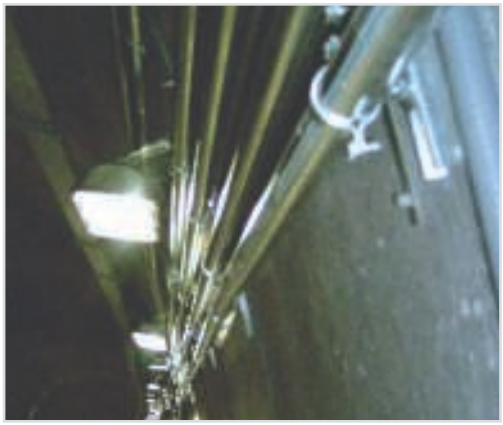

The channel system in HDG is assembly friendly and the ideal corrosion protection for steel. Suitable for:

- Plant engineering and construction, such as sewage plants or other industrial applications
- Fixing of slightly rear-ventilated façades
- Fixing of pipe ropes and loadcarrying structure in mild exterior zones (exposed and not exposed to weather)
- Installation of pipelines
- Other installations under roofings

Channels FUS
FUS **Page 151**

Cantilever
FCA **Page 151**

FUF OC 41 **Page 152** FHS-Clix P **Page 152** SF L **Page 153**

Corrosion behavior of hot-dip galvanized steel

The hot-dip galvanized assortment offers the same advantages than the galvanized one:
Despite varying height and thickness of the channel, it's possible to use the same accessories.

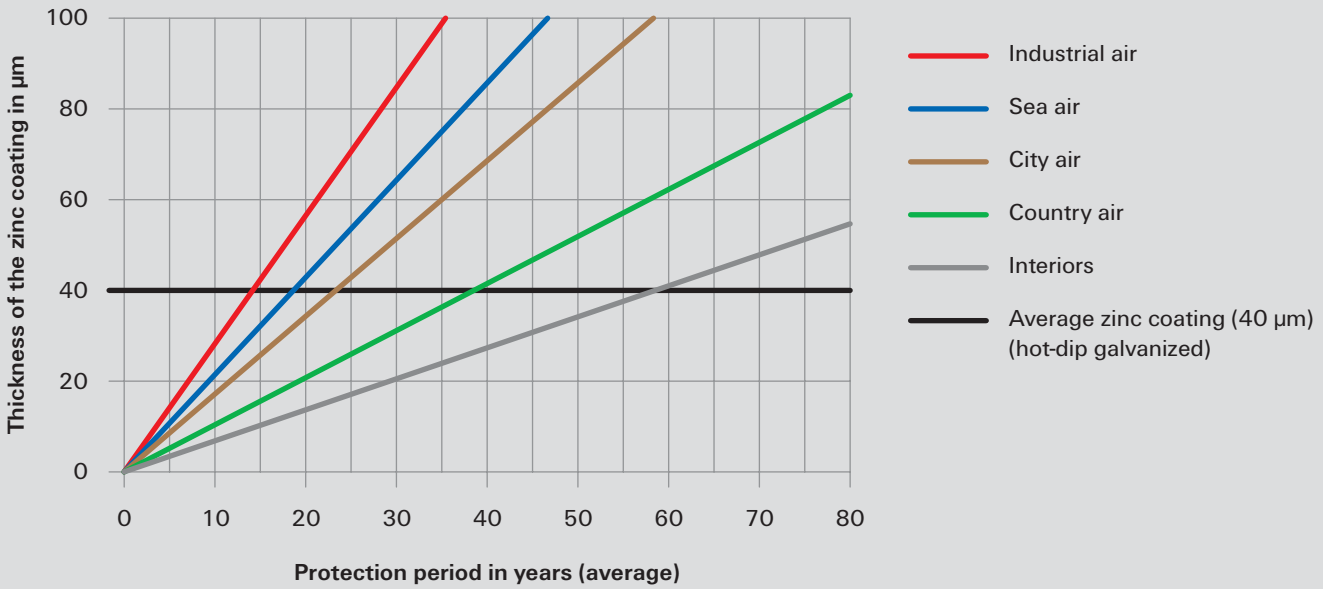

Term of protection:

Hot-dip galvanizing is suitable for the protection of steel. It corroded, but 10 times slower than a usual galvanizing and always before the steel starts to corrode. Thereby the zinc erosion is depending on the surrounding atmosphere and moisture.

However, it can be assumed that the zinc erosion is between 1 and 10 µm a year. Therefore the thickness of the zinc coating is essential for the lifetime of the material.

Channel FUS hdg.

OVERVIEW

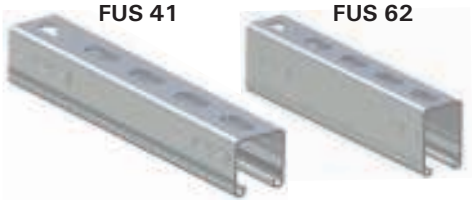

Properties:

Material	Steel S235 JR (material no. 1.0045) acc. to EN 10027-2
Zinc plating	Hot-dip galvanized, approx. 40 µm acc. to DIN EN ISO 1461

TECHNICAL DATA

Type	Art. No.	Qty. per box	Length L	Thickness S	Weight
		[pcs.]	[m]	[mm]	[kg/m]
FUS 41/2,0 - 3 m hdg.	**517426**	1	3	2,0	2.05
FUS 62/2,5 - 3 m hdg.	**517427**	1	3	2,5	3.26
FUS 62/2,5 - 6 m hdg.	**517428**	1	6	2,5	3.26

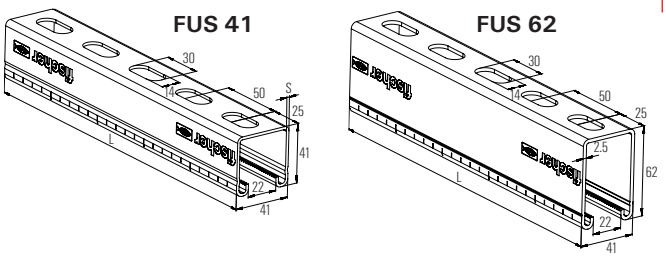

Cantilever arm FCA hdg.

OVERVIEW

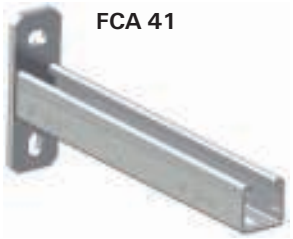

Properties:

Material	Base plate: Steel DC01 (material no. 1.0330) acc. to DIN EN 10111 and DIN EN 10139 Channel: Steel S235 JR (material no. 10037) acc. to DIN EN 10025
Zinc plating	Hot-dip galvanized, approx. 40 µm acc. to DIN EN ISO 1461

TECHNICAL DATA

Type	Art. No.	Qty. per box	Profile	Length L
		[pcs.]		[mm]
FCA 300 hdg.	**517411**	1	41/2.5	300
FCA 450 hdg.	**517412**	1	41/2.5	450
FCA 600 hdg.	**517413**	1	41/2.5	600
FCA 750 hdg.	**517414**	1	41/2.5	750

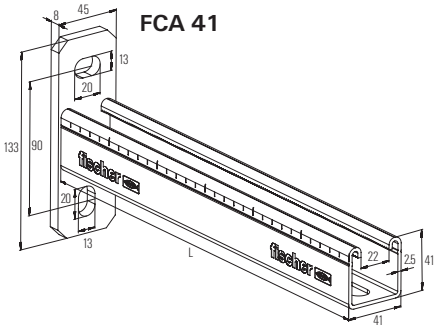

LOADS

For channel and cantilever arm see chapter FUS on pages 74–79.

Channel connector FUF OC 41 hdg.

OVERVIEW

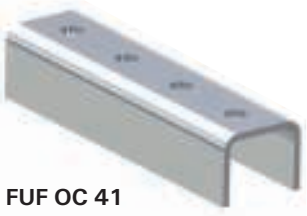

FUF OC 41

Properties:

Material	Steel DD11 (material no. 1.0332) acc. to DIN EN 10111
Zinc plating	Hot-dip galvanized, approx. 40 µm acc. to DIN EN ISO 1461

TECHNICAL DATA

Type	Art. No.	Qty. per box [pcs.]	Thickness [mm]	Length [mm]
FUF OC 41 hdg.	**517415**	20	4	200

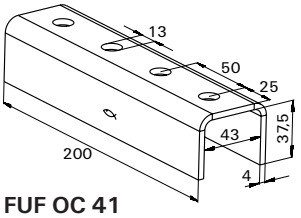

FUF OC 41

Channel nut FCN Clix P hdg.

OVERVIEW

FCN Clix P

Properties:

Material	Steel S235 JR (material no. 1.0037) acc. to DIN EN 10025, plastic nylon PA6
Zinc plating	Hot-dip galvanized, approx. 40 µm acc. to DIN EN ISO 1461

TECHNICAL DATA

Type	Art. No.	Qty. per box [pcs.]	Thread M	Thickness S [mm]
FCN Clix P 12	**517420**	100	M12	9.5

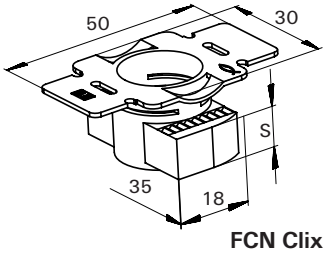

FCN Clix P

LOADS

FCN Clix P hdg.

Type	Max. recom. load (tension) $N_{rec.}$		Max. recom. load (shear) $V_{rec.}$	Tightenning torque screw qualtity 8.8
	FUS 20 mm	FUS 25 mm	M	S
	[kN]	[kN]	[kN]	[Nm]
M12	5.0	8.0	1.5	50

Saddle flange SF L hdg.

OVERVIEW

SF L41

Properties:

Material	Base plate: Steel DC01 (material no. 1.0330) acc. to DIN EN 10139 U profile: S235 JR (material no. 1.0037) acc. to DIN EN 10025
Zinc plating	Hot-dip galvanized, approx. 40 µm acc. to DIN EN ISO 1461

TECHNICAL DATA

Type	Art. No.	Qty. per box [pcs.]	For profile FUS
SF L 41 hdg.	**517421**	10	21; 41; 21D; 62

SF L41

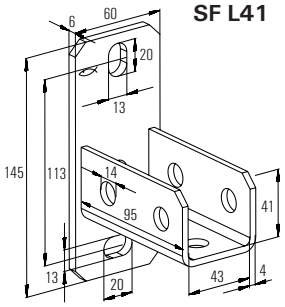

Stainless Steel Installation System

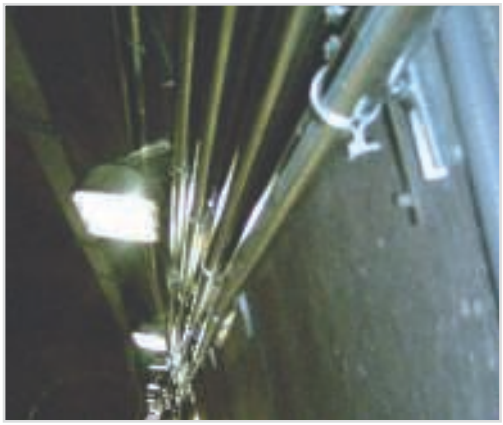

A complete installation system resistant to out door and aggressive environment conditions, suitable for:

- **industrial piping like e.g. medical and food production**
- **outdoor heating and sanitary supply pipes**
- **ventilation, air duct**
- **solar panels installations**

Pipe clamps
FRS A2 / FRS A4 **Page 156**

MS-L A2
MS 27/18 **Page 157**

FUS A2/A4
FUS **Page 160**

Accessories A2/A4
STS **Page 161**

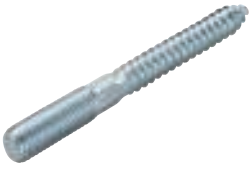

ALK **Page 157** FHS-Clix **Page 158** MW **Page 159** SF **Page 159** HG **Page 158**

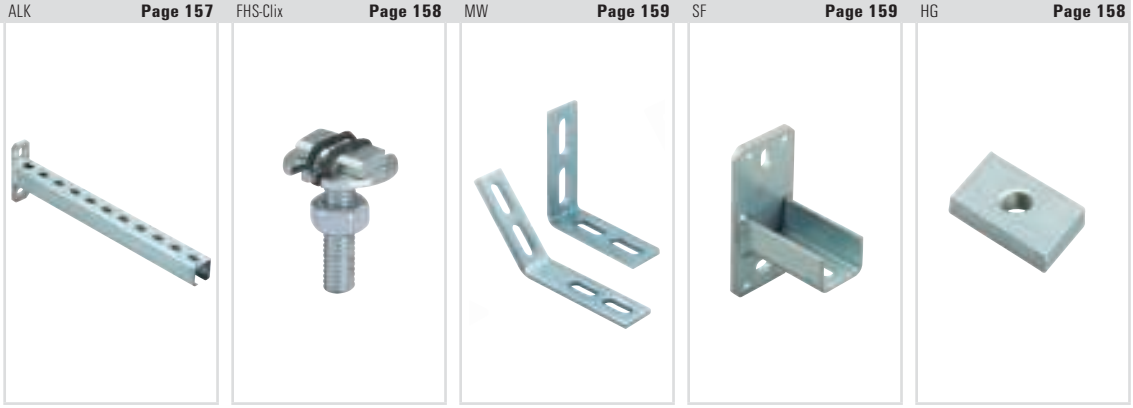

FCA **Page 160** SF **Page 161** TKR **Page 162** HK **Page 162** FCN Clix **Page 163**

G **Page 164** GS **Page 164** VM **Page 165** U **Page 165** MU **Page 166** SKS **Page 166**

Pipe clamp FRS A2/A4

OVERVIEW

FRS A2 / A4

TECHNICAL DATA

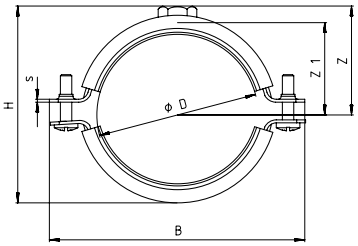

FRS A2 / A4

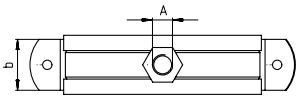

Type	Art. No.	Qty. per box	Max. recom. static load (centr. tension) $N_{recom.}$	Nominal size	Clamping range D	Locking screw	Connecting thread A	Connecting nut height	Width x thickness clamp band b x s	Width B	Height H	Height Z	Height Z1
		pcs.	[kN]	[inch]	[mm]			[mm]	[mm]	[mm]	[mm]	[mm]	[mm]
Stainless steel A2													
FRS 3/8" A2	**64290**	100	1.0	3/8"	15 - 19	M 6 x 20	M 8	6.8	20 x 1.25	62	38	23	16
FRS 1/2" A2	**64536**	100	1.0	1/2"	20 - 24	M 6 x 20	M 8	6.8	20 x 1.25	68	44	26	19
FRS 3/4" A2	**64639**	100	1.0	3/4"	25 - 30	M 6 x 20	M 8	6.8	20 x 1.25	75	50	29	22
FRS 1" A2	**64646**	100	1.0	1"	31 - 38	M 6 x 20	M 8	6.8	20 x 1.25	80	56	32	25
FRS 1 1/4" A2	**64669**	50	1.0	1 1/4"	40 - 46	M 6 x 20	M 8	6.8	20 x 1.25	90	64	36	29
FRS 1 1/2" A2	**64673**	50	1.0	1 1/2"	48 - 54	M 6 x 20	M 8	6.8	20 x 1.25	97	74	41	34
FRS 54 - 59 A2	**64674**	50	1.0		54 - 59	M 6 x 20	M 8	6.8	20 x 1.25	104	83	45	38
FRS 2" A2	**64675**	50	1.0	2"	60 - 64	M 6 x 20	M 8	6.8	20 x 1.25	110	89	48	41
FRS 67 - 71 A2	**64688**	25	1.3		67 - 71	M 6 x 20	M 10	8	25 x 1.5	124	98	51	43
FRS 2 1/2" A2	**64689**	25	1.3	2 1/2"	72 - 78	M 6 x 30	M 10	8	25 x 1.5	129	103	56	48
FRS 81 - 86 2	**64693**	25	1.3		81 - 86	M 6 x 30	M 10	8	25 x 1.5	133	110	58	50
FRS 3" A2	**64694**	25	1.3	3"	87 - 92	M 6 x 30	M 10	8	25 x 1.5	142	112	60	52
FRS 95 - 103 A2	**64695**	25	1.3		95 - 103	M 6 x 30	M 10	8	25 x 1.5	156	120	68	60
FRS 4" A2	**64697**	20	2.0	4"	102 - 116	M 6 x 30	M 10	8	25 x 2.0	172	142	75	67
FRS 121 - 127 A2	**64709**	10	2.0		121 - 127	M 8 x 30	M 10	8	25 x 2.0	192	162	85	77
FRS 133 - 141 A2	**64713**	10	2.0	5"	133 - 141	M 8 x 30	M 10	8	25 x 2.0	198	167	88	80
FRS 159 - 168 A2	**64714**	8	2.0	6"	159 - 169	M 8 x 30	M 10	8	25 x 2.0	226	199	104	96
Stainless steel A4													
FRS 3/8" A4	**64864**	100	1.0	3/8"	15 - 19	M 6 x 20	M 8	6.8	20 x 1.25	62	38	23	16
FRS 1/2"4 A4	**64865**	100	1.0	1/2"	20 - 24	M 6 x 20	M 8	6.8	20 x 1.25	68	44	26	19
FRS 3/4" A4	**64866**	100	1.0	3/4"	25 - 30	M 6 x 20	M 8	6.8	20 x 1.25	75	50	29	22
FRS 1" A4	**64868**	100	1.0	1"	31 - 38	M 6 x 20	M 8	6.8	20 x 1.25	80	56	32	25
FRS 1 1/4" A4	**64869**	50	1.0	1 1/4"	40 - 46	M 6 x 20	M 8	6.8	20 x 1.25	90	64	36	29
FRS 1 1/2" A4	**64870**	50	1.0	1 1/2"	48 - 54	M 6 x 20	M 8	6.8	20 x 1.25	97	74	41	34
FRS 54 - 59 A4	**64873**	50	1.0		54 - 59	M 6 x 20	M 8	6.8	20 x 1.25	104	83	45	38
FRS 2" A4	**64874**	50	1.0	2"	60 - 64	M 6 x 20	M 8	6.8	20 x 1.25	110	89	48	41
FRS 67 - 71 A4	**64875**	25	1.3		67 - 71	M 6 x 20	M 10	8	25 x 1.5	124	98	51	43
FRS 2 1/2" A4	**64879**	25	1.3	2 1/2"	72 - 78	M 6 x 30	M 10	8	25 x 1.5	129	103	56	48
FRS 81 - 86 A4	**64892**	25	1.3		81 - 86	M 6 x 30	M 10	8	25 x 1.5	133	110	58	50
FRS 3" A4	**64893**	25	1.3	3"	87 - 92	M 6 x 30	M 10	8	25 x 1.5	142	112	60	52
FRS 95 - 103 A4	**64894**	25	1.3		95 - 103	M 6 x 30	M 10	8	25 x 1.5	156	120	68	60
FRS 4" A4	**64898**	20	2.0	4"	102 - 116	M 6 x 30	M 10	8	25 x 2.0	172	142	75	67
FRS 121 - 127 A4	**64899**	10	2.0		121 - 127	M 8 x 30	M 10	8	25 x 2.0	192	162	85	77
FRS 133 - 141 A4	**64901**	10	2.0	5"	133 - 141	M 8 x 30	M 10	8	25 x 2.0	198	167	88	80
FRS 159 - 168 A4	**64903**	8	2.0	6"	159 - 169	M 8 x 30	M 10	8	25 x 2.0	226	199	104	96

MS-L Channel A2

OVERVIEW

MS 27/18

Properties:

Material	Stainless steel of the corrosion resistance class II, e.g. A2

TECHNICAL DATA

MS 27/18

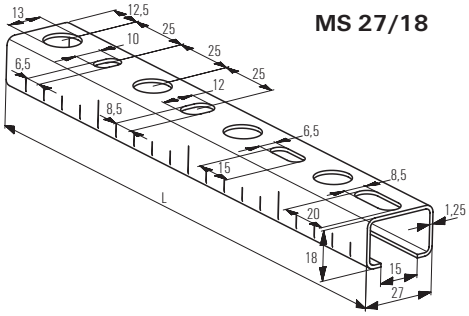

Type	Art. No.	Qty. per box	Length L	Profile cross section	Weight
		pcs.	[mm]	[cm²]	[kg/m]
MS 27/18 A2 - 2 m	**64905**	1	2000	0.84	0.66

LOADS

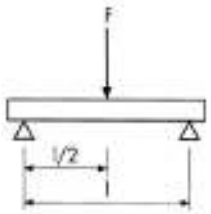

Type		Span 0.5 m	1 m	1.5 m	2 m
MS 27/18/1.25	Max. rec. static load F [kN]	0.44	0.16	0.07	0.04

Cantilever arm ALK A2

OVERVIEW

ALK 27/18

Properties:

Material	Stainless steel of the corrosion resistance class II, e.g. A2

TECHNICAL DATA

Type	Art. No.	Qty. per box	Length L
		pcs.	[mm]
ALK 27/18 - 200 A2	**65101**	20	200

ALK 27/18

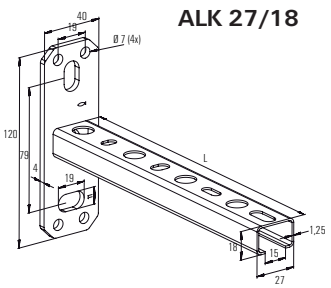

T-head bolt FHS Clix A2

OVERVIEW

FHS Clix

Properties:

Material	Stainless steel of the corrosion resistance class II, e.g. A2

TECHNICAL DATA

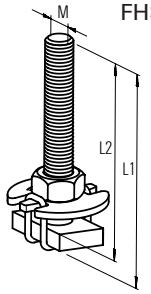

FHS Clix

Type	Art. No.	Qty. per box	Thread M	Length L1	Length L2
		pcs.		[mm]	[mm]
FHS CLIX 8 x 30 A2	**77634**	100	M 8	30	25
FHS CLIX 10 x 30 A2	**64975**	100	M 10	30	25

INSTALLATION

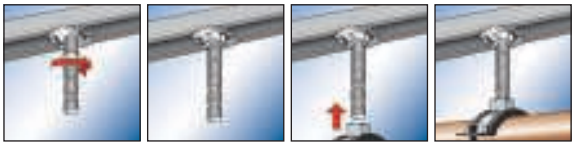

LOADS

Type		Max. recom. load (tension) $N_{rec.}$ [kN]	Max recom. load (shear) $V_{rec.}$ [kN]	Tightening torque [Nm]
FHS Clix M 8		1.7	0.2	5
FHS Clix M 10		2.0	0.3	8

Channel nut HG A2

OVERVIEW

HG

TECHNICAL DATA

HG

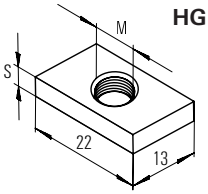

Type	Art. No.	Qty. per box	Thread M	Thickness S
		pcs.		[mm]
HG 27 M 8 A2	**77636**	100	M 8	4
HG 27 M 10 A2	**64977**	100	M 10	4

LOADS

Type	Profile	Max. recom. load (tension) $N_{rec.}$ [kN]	Max recom. load (shear) $V_{rec.}$ [kN]	Tightening torque [Nm]
HG 27 M 8	27/18	1.7	0.4	8
HG 27 M 10	27/18	2.0	0.5	10

Installation angle bracket MW A2

OVERVIEW

MW 27–45°

MW 27–90°

Properties:

Material	Stainless steel of the corrosion resistance class II, e.g. A2

TECHNICAL DATA

Type	Art. No.	Qty. per box pcs.
MW 27-45° A2	**77626**	25
MW 27-90° A2	**77625**	25

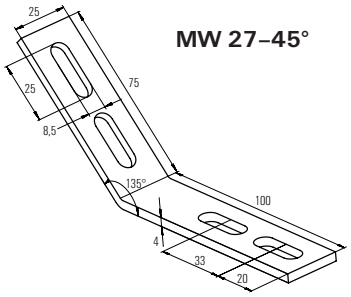

MW 27–45°

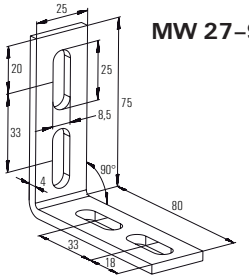

MW 27–90°

Saddle flange SF A2

OVERVIEW

SF L

Properties:

Material	Stainless steel of the corrosion resistance class II, e.g. A2

TECHNICAL DATA

Type	Art. No.	Qty. per box pcs.	Version
SF L 27	**77615**	15	vertical

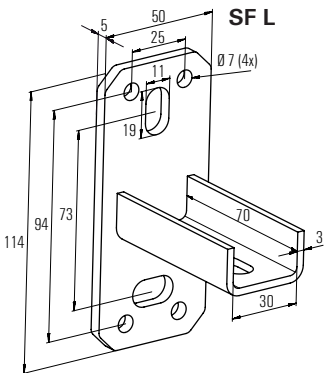

FUS Channel A2/A4

OVERVIEW

Properties:

Material A2	Stainless steel of the corrosion resistance class II, e.g. A2
Material A4	Stainless steel of the corrosion resistance class III, e.g. A4

TECHNICAL DATA

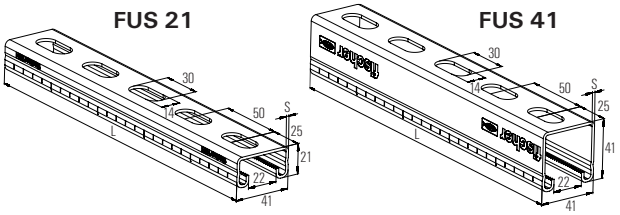

Type	Art. No.	Qty. per box	Length L	Thickness	Weight
		pcs.	[mm]	[mm]	[kg/m]
A2					
FUS 21/2.0 A2 - 2 m	**504466**	1	2000	2.0	1.44
FUS 41/2.0 A2 - 2 m	**504468**	1	2000	2.0	2.06
FUS 41/2.5 A2 - 2 m	**504470**	1	2000	2.5	2.45
A4					
FUS 21/2.0 A4 - 2 m	**504472**	1	2000	2.0	1.44
FUS 41/2.0 A4 - 2 m	**504474**	1	2000	2.0	2.06
FUS 41/2.5 A4 - 2 m	**504475**	1	2000	2.5	2.45

LOADS

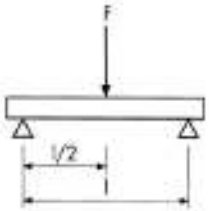

Type		Span 0.5 m	1 m	1.5 m	2 m
FUS 21/2.0 2m A2/A4	Max. rec. static load F [kN]	1.14	0.44	0.20	0.11
FUS 41/2.0 2m A2/A4	Max. rec. static load F [kN]	3.30	1.65	1.08	0.61
FUS 41/2.5 2m A2/A4	Max. rec. static load F [kN]	3.65	1.82	1.21	0.68

Cantilever arm FCA A4

OVERVIEW

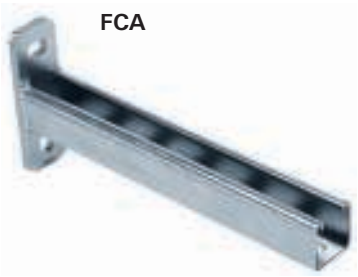

Properties:

Material A4:	Stainless steel of the corrosion resistance class III, e.g. A4

LOADS

Type	Max. rec. static load [kN]
FCA 41 A4 - 300	1.33
FCA 41 A4 - 450	0.90
FCA 41 A4 - 600	0.67

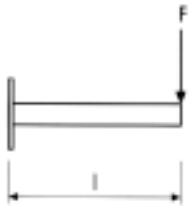

TECHNICAL DATA

Type	Art. No.	Qty. per box	Length
		pcs.	m
FCA 41 A4 - 300	**505487**	1	300
FCA 41 A4 - 450	**505488**	1	450
FCA 41 A4 - 600	**505489**	1	600

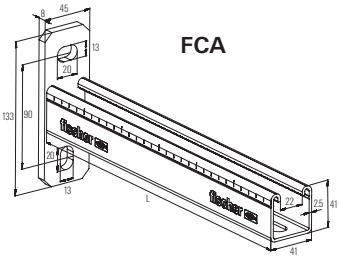

Saddle flange SF L A4

OVERVIEW

SF L 41

Properties:

Material A4:	Stainless steel of the corrosion resistance class III, e.g. A4

TECHNICAL DATA

Type	Art. No.	Qty. per box pcs.	For profile
SF L 41 A4	**504522**	10	FUS 21 + FUS 41

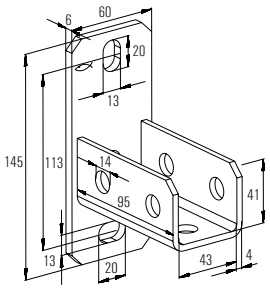

Bracket FAF A4

OVERVIEW

FAF 2

FAF 4

FAF 2/135°

Properties:

Material A4:	Stainless steel of the corrosion resistance class III, e.g. A4

TECHNICAL DATA

Type	Art. No.	Qty. per box pcs.
FAF 2 A4	**504519**	25
FAF 4 A4	**504520**	25
FAF 2/135° A4	**504521**	25

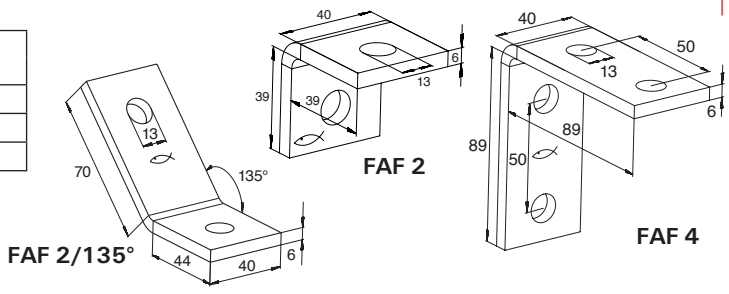

Beam clamp TKR A4

OVERVIEW

TKR

Properties:

Material A4	Stainless steel of the corrosion resistance class III, e.g. A4

TECHNICAL DATA

Type	Art. No.		Qty. per box	For profile MS
			pcs.	
TKR 21 - 42 A4	**504476**		20	FUS 21 - FUS 42

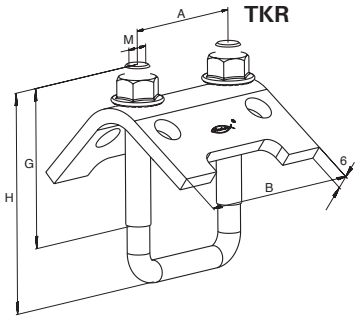

Channel washer HK 41 A4

OVERVIEW

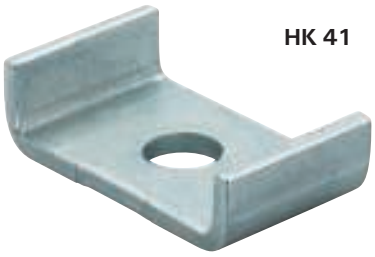

HK 41

Properties:

Material A4	Stainless steel of the corrosion resistance class III, e.g. A4

TECHNICAL DATA

Type	Art. No.	Qty. per box	For profile	Hole
				D
		pcs.		mm
HK 41 12.5 - A4	**504489**	50	all FUS channels	12.5

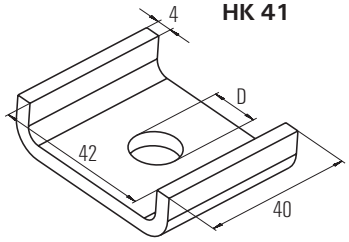

Clix channel nut FCN Clix A4

OVERVIEW

FCN Clix P

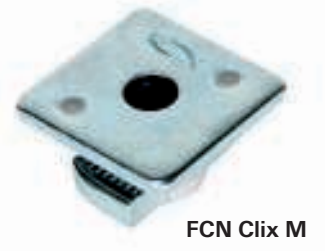

FCN Clix M

Properties:

Material A4	Stainless steel of the corrosion resistance class III, e.g. A4
Plastic	Nylon PA 6

TECHNICAL DATA

Type	Art. No.	Qty. per box	Thread M	Thickness S
		pcs.		[mm]
FCN Clix P A4				
FCN Clix P 8 A4	**504436**	100	M 8	6
FCN Clix P 10 A4	**504437**	100	M 10	8
FCN Clix P 12 A4	**504439**	100	M 12	9.5
FCN Clix M A4				
FCN Clix M 8 A4	**504440**	100	M 8	6
FCN Clix M 10 A4	**504447**	100	M 10	8

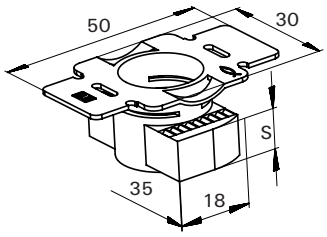

FCN Clix P

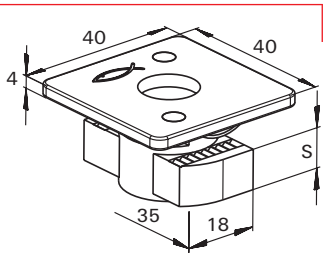

FCN Clix M

Stud screw STS A2/A4

OVERVIEW

STS

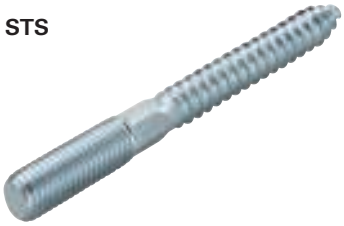

Properties:

Material A2	Stainless steel of the corrosion resistance class II, e.g. A2
Material A4	Stainless steel of the corrosion resistance class III, e.g. A4

TECHNICAL DATA

Type	Art. No.	Qty. per box	Length	Thread
		pcs.	mm	
A2				
STS 8 x 80 A2	**65132**	100	80	M 8
STS 8 x 100 A2	**77643**	100	100	M 8
STS 10 x 100 A2	**65153**	100	100	M 10
A4				
STS 8 x 100 A4	**77715**	100	100	M 8
STS 10 x 100 A4	**77716**	100	100	M 10

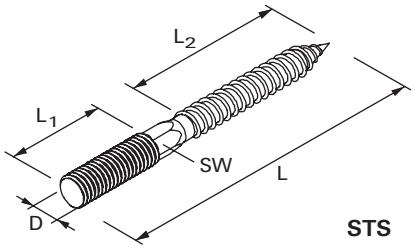

STS

Threaded rod G A2/A4

OVERVIEW

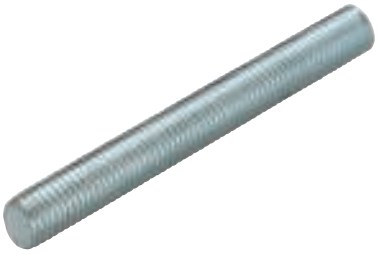

G

Properties:

Material A2	Stainless steel of the corrosion resistance class II, e.g. A2
Material A4	Stainless steel of the corrosion resistance class III, e.g. A4

TECHNICAL DATA

Type	Art. No.	Qty. per box pcs.	Length L [mm]	Thread M
Stainless Steel A2				
G 8 A2	**77644**	5	1000	M 8
G 10 A2	**65173**	5	1000	M 10
Stainless Steel A4				
G 8 A4	**77645**	5	1000	M 8
G 10 A4	**65174**	5	1000	M 10

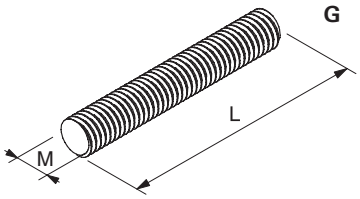

Threaded stud GS A4

OVERVIEW

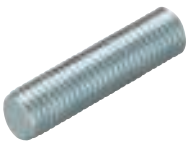

GS

Properties:

Material A4	Stainless steel of the corrosion resistance class III, e.g. A4

TECHNICAL DATA

Type	Art. No.	Qty. per box pcs.	Length L [mm]	Thread M
GS 8/40 A4	**505536**	100	40	M 8
GS 8/60 A4	**505537**	100	60	M 8
GS 10/40 A4	**505538**	100	40	M 10
GS 10/60 A4	**505539**	100	60	M 10

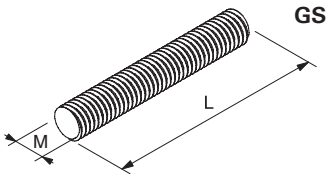

Hexagonal connector VM A4

OVERVIEW

VM

Properties:

Material A4	Stainless steel of the corrosion resistance class III, e.g. A4

TECHNICAL DATA

Type	Art. No.	Qty. per box pcs.	Length L [mm]	Thread D [mm]	Width across nut SW
VM M8 A4	**505540**	100	30	M 8	11
VM M10 A4	**505541**	100	30	M 10	13

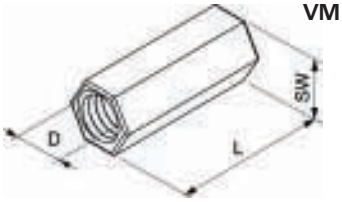

VM

Washer U A4

OVERVIEW

U

Properties:

Material A4	Stainless steel of the corrosion resistance class III, e.g. A4

TECHNICAL DATA

Type	Art. No.	Qty. per box pcs.	Thickness S [mm]	External Ø A [mm]	Hole Ø [mm]
U 8 x 28 A4	**505542**	100	2	28	8.4
U 8 x 40 A4	**505543**	100	3	40	8.4
U 10 x 28 A4	**505544**	100	2	30	10.5
U 10 x 40 A4	**505545**	100	3	40	10.5
U 12 x 24 A4	**505546**	100	2	24	12.5

Hexagonal nut MU A4

OVERVIEW

MU

Properties:

Material A4	Stainless steel of the corrosion resistance class III, e.g. A4

According: DIN 934

TECHNICAL DATA

Type	Art. No.	Qty. per box pcs.	Thread D [mm]	Width across nut SW
Stainless steel A4				
MU M 8 A4	**77642**	100	M 8	13
MU M 10 A4	**77641**	100	M 10	17

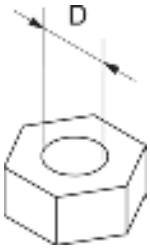

MU

Hexagonal screw SKS A4

OVERVIEW

SKS

Properties:

Material A4	Stainless steel of the corrosion resistance class III, e.g. A4

TECHNICAL DATA

Type	Art. No.	Qty. per box pcs.	Thread D	Width across nut SW
Stainless steel A4				
SKS M 10 x 30 A4	**505547**	100	M 10	17
SKS M 12 x 30 A4	**505548**	100	M 12	19

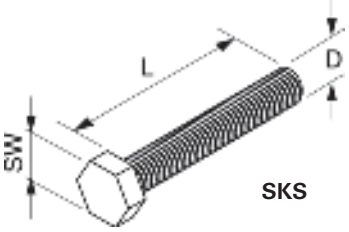

SKS

CORROSION RESISTANCE CLASSES

Steel Grade				Designation of the Steel Group	Corrosion	
Material No.	Short Name	AISI	UNS	with	Resistance Class	Exposure and Typical Applications
1.4305	X8CrNiS18-9	303	S 30300	A1	I / light	Indoor climate except damp location.
1.4301	X5CrNi18-10	304	S 30400	A2	II / moderate	Accessible constructions without nameable content of chlorides or sulfur dioxide, except industrial atmosphere.
1.4362	X2CrNiN23-4	–	S32304	A4	III / medium	Constructions with moderate chloride and sulfur dioxide exposure and inaccessible constructions.
1.4401	X5CrNiMo17-12-2	316	S 31600			
1.4404	X2CrNiMo17-12-2	316 L	S 31603	A4L		
1.4571	X6CrNiMoTi17-12-2	316 Ti	S 31635	A5		
1.4529	X1NiCrMoCuN25-20-7	–	N 08926	1.4529	IV / strong	High corrosion exposure due to chlorine, chloride and/or sulfur dioxide, high humidity as well as accumulation of hazardous substances.

Air conditioner fixings

Air conditioner fixing

MCE LP/LPH **Page 170**

MCE PT/PTH **Page 170**

MCE TT **Page 170**

KSU **Page 172**

Air conditioner fixing MCE

OVERVIEW

For fixing of:
- Air conditioner on wall
- Air conditioners on pitched roofs (MCE TT)

MCE LP/LPH

MCE PT/PTH

MCE TT

DESCRIPTION

MCE LP/LPH
- Pre-assembled brackets zinc-plated and powder coated.
- Colour RAL 9002.
- Bracket MCE LPH and PTH is 50 cm high, for fixing in the case of non solid brickwork.

MCE PT/PTH
- Pre-assembled.
- Bracket with horizontal channel, zinc-plated and powder coated.
- Colour RAL 9002.

MCE TT
- Bracket zinc-plated and powder coated for fixing on pitched roof.
- Colour RAL 9002.

Advantages / Benefit

MCE LP/LPH
- Pre-assembled bracket to shorten installation time.
- Brackets including anti vibration dumper.
- Including 4 plugs SX12 and 4 zinc-plated screws.

MCE PT/PTH
- The horizontal rails allow for positioning and adjustment of the bracket.
- Complete assembled bracket with anti vibration dumper.
- The bracket is preassembled there the installation time is reduced.
- Including 5 plug SX12 and 5 zinc-plated screws.

MCE TT
- Complete system including anti vibration dumper.
- Adjustable angle of the bracket for roofs with a pitched of 10° – 40°.

INSTALLATION

- To ensure the load bearing capacity the quality and condition of the substrate should be checked.

MCE LP/LPH

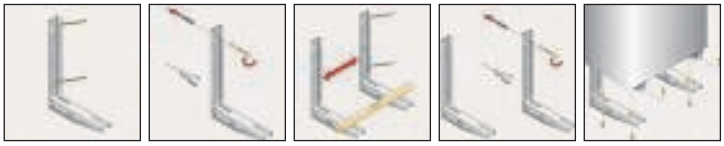

MCE PT/PTH

TECHNICAL DATA

MCE LP/LPH

MCE PT/PTH

MCE TT

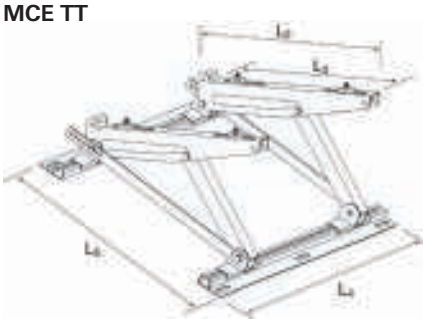

Type	Art. No.	Qty. per box	Length L_1	Length L_2	Length L_3	Length L_4	Length L_5
		pcs.	[mm]	[mm]	[mm]	[mm]	[mm]
MCE 380 LP	**046464**	1	400	380	330	86	37
MCE 450 LP	**046736**	1	400	450	400	86	34
MCE 450 LPH	**046758**	1	500	450	400	89	31
MCE 380 PT	**046768**	1	400	380	330	850	29
MCE 450 PT	**046805**	1	400	450	400	850	30
MCE 450 PTH	**046808**	1	500	450	400	850	32
MCE 450 TT	**046860**	1	-	450	420	850	450 + 555

LOADS

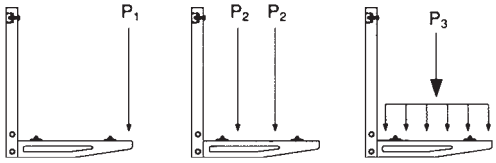

	Rec. loads per single beam		
	P_1 [kN]	P_2 [kN]	P_3 [kN]
MCE 380 LP	0.5	0.5	1.0
MCE 450 LP	0.5	0.5	1.0
MCE 450 LPH	0.5	0.5	1.0
MCE 380 PT	0.5	0.5	1.0
MCE 450 PT	0.5	0.5	1.0
MCE 450 PTH	0.5	0.5	1.0
MCE 450 TT	loads see extra table		

	P_2 [kN]
α > 15°	0.3
α > 20°	0.37
α > 25°	0.47
α > 30°	0.6

Air conditioner fixing KSU

OVERVIEW

Air conditioner fixing **KSU** without noise protection

For fixing of:
- Air conditioner on wall
- Pumps
- Ventilators

Noise protection **PA**

Air conditioner fixing **KSU S** with noise protection

DESCRIPTION

- For safe wall connection of air conditioner. With or without noise protection pieces.
- The set consists of finished cut channels for instant use. No collecting of single pieces necessary.

INSTALLATION

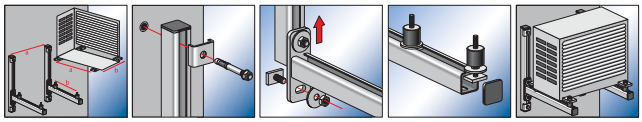

Advantages / Benefit

- Different cantilever length for different air-conditioner sizes.
- Due to the vertical installation channel MS 38/40 a safe connection also in brick wall is possible.
- With the included T-head bolt an easy installation and adjustment of the cantilevers is possible. This safes time at the installation.
- Individual adjustment of the noise protection pieces on the cantilevers due to sliding nuts.
- The set KSU-S already includes 4 noise protection pieces for reduction of the noise level and vibrations.

TECHNICAL DATA

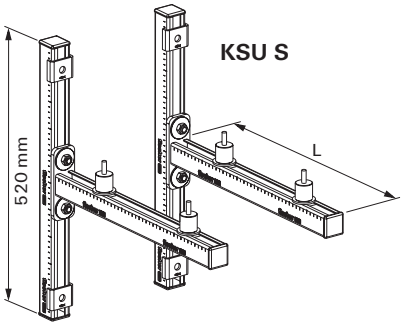

Type	Art. No.	Qty. per box	Contents	Length	Max. recom. loads	Construction	
				L	kN	with noise protection	without noise protection
		pcs.		[mm]	[mm]		
KSU S 440	**512709**	1	2 x MS channel 38/40-520, 2 x ALK cantilever 38/40, 6 x AK cover cap, 4 x HS 10 x 30 T-head bolt, 4 x U 8.2 x 40 washer, 4 x SM 38 M8 sliding nut, 4 x SKS 8 x 30 hexagonal screw, 4 x HK 38 channel washer, 4 x PA 30 x 30 noise protection	440	1500	●	
KSU S 520	**512710**	1		520	1500	●	
KSU S 600	**512711**	1		600	1500	●	
KSU 400	**512712**	1	2 x MS channel 38/40-520, 2 x ALK cantilever 38/40, 6 x AK cover cap, 4 x HS 10 x 30 T-head bolt, 4 x U 8.2 x 40 washer, 4 x SM 38 M8 sliding nut, 4 x SKS 8 x 30 hexagonal screw, 4 x HK 38 channel washer	440	1500		●
KSU 520	**512713**	1		520	1500		●
KSU 600	**512714**	1		600	1500		●
PA	**512715**	4		30 x 30 M8			

Electrical fixings

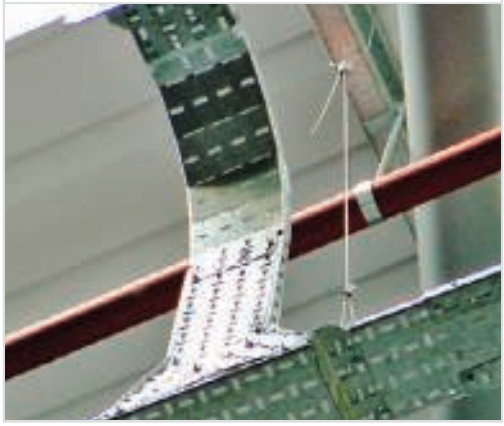

fischer E-fix consist of a smart range of fixings for cable and pipes in electrical systems

Cable clip/cable tie
LS **Page 176**

Pipe clip
RC **Page 185, 186**

Metal pipe clip
AM **Page 190**

Straps
GWB **Page 192**

Installation tools
SZE **Page 192**

ES, ZS, SD **Page 177, 178**

KB. SHA **Page 179, 181**

NS, NSB **Page 182, 183**

BN, UBN **Page 184**

FC **Page 187**

SCH **Page 188**

BSM **Page 191**

LBV **Page 192**

LBK **Page 192**

ED **Page 192**

ClipFix plus cable strap LS

OVERVIEW

SF plus LS

Suitable for:
- Concrete
- Natural stone, dense structure
- Solid brick
- Solid sand-lime brick
- Solid block made from lightweight concrete

For fixing of:
- Conduits
- Flexible pipes

DESCRIPTION

- Cable strap for direct fixing of individual cables and cable bundles of 3 to 40 mm diameter.

Advantages/benefits

- One piece fixing – saves plug, clamp and screw.
- Simple and quick one-hand installation reduces work involved by up to 80 %.
- High quality material permits year-round application, even when exposed to frost.
- Temperature-resistant from –20 °C to +80 °C.
- Unique operating principle guarantees high load-bearing capacity.
- Halogen-free and flame resistant for increased safety in the event of fire.
- Silicone-free.

INSTALLATION

Type of installation

- Plug-fitting installation.

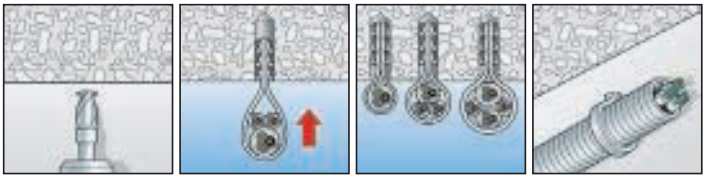

TECHNICAL DATA

SF plus LS

Type	Art. No.	Drill-hole d_0 [Ø mm]	Min. drill hole depth t [mm]	Clamping range D [mm]	Qty. per box pcs.
SF plus LS 3/13	**058155**	6	50	3 – 13	100
SF plus LS 8/28	**058156**	6	50	8 – 28	100
SF plus LS 20/40	**058157**	6	50	20 – 40	100

Min. drill hole depth for the smallest given cable cross-section.

Breaking loads in concrete

Drill diameter across cutting edges [mm]	Breaking load/ failure loads [kN]
6.0	0.41
6.1	0.36
6.2	0.32
6.3	0.27
6.4	0.23

ClipFix plus single clamp ES / Twin clamp ZS

OVERVIEW

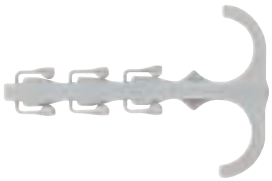

SF plus ZS

SF plus ES

Suitable for:
- Concrete
- Natural stone, dense structure
- Solid brick
- Solid sand-lime brick
- Solid block made from lightweight concrete

For fixing of:
- Conduits
- Flexible and rigid plastic pipes

DESCRIPTION

- Complete fixing element for simple and time-saving plug-fitting of conduits or flexible pipes.
- For wall, floor and ceiling installation.

Advantages/benefits

- One piece fixing – saves plug, clamp and screw.
- Simple and quick one-hand installation reduces work involved by up to 80 %.
- Temperature-resistant from –20 °C to +80 °C.
- Unique operating principle guarantees high load-bearing capacity.
- High quality material permits year-round application, even when exposed to frost.
- Halogen-free and flame-resistant for increased safety in the event of fire.
- Silicone-free.

INSTALLATION

Type of installation

- Plug-fitting installation.

ClipFix plus twin clamp ZS

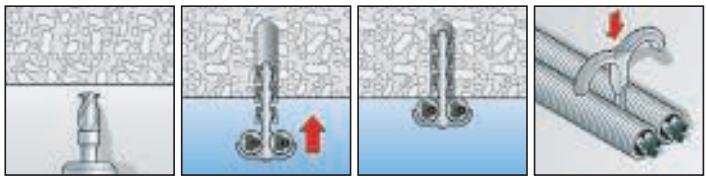

ClipFix plus single clamp ES

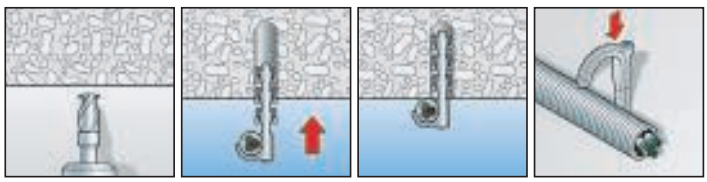

TECHNICAL DATA

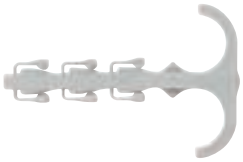

SF plus ZS

SF plus ES

Type	Art. No.	Drill-hole d_0 [Ø mm]	Drill hole depth h_0 [mm]	Clamping range D [mm]	Qty. per box pcs.
SF plus ZS 10	**058184**	6	35 - 45	3 - 12	100
SF plus ZS 18	**048161**	6	40 - 50	10 - 25	100
SF plus ZS 28	**048162**	6	40 - 55	15 - 31	75
SF plus ES 10	**048151**	6	40 - 45	3 - 12	100
SF plus ES 18	**048152**	6	40 - 45	10 - 25	100
SF plus ES 28	**058183**	6	40 - 45	15 - 31	100

Breaking loads in concrete

Drill diameter across cutting edges [mm]	Breaking load/ failure loads [kN]
6.0	0.60
6.1	0.56
6.2	0.52
6.3	0.48
6.4	0.42

ClipFix plus clip fixing SD

OVERVIEW

SF plus SD

Suitable for:
- Concrete
- Natural stone, dense structure
- Solid brick
- Solid sand-lime brick
- Solid block made from lightweight concrete

For fixing of:
- Cable channels
- Strips
- Profiles
- Flat building components
- Cable clasp KB
- Installation base SHA MS

DESCRIPTION

- Nylon fixing pin

Advantages/benefits
- The complete element combines plug and screw.
- Simple and quick one-hand installation reduces work involved.
- Temperature-resistant from –20 °C to +80 °C.
- Unique operating principle guarantees high load-bearing capacity.
- High quality material permits year-round application, even when exposed to frost.
- Halogen-free and flame resistant for increased safety in the event of fire.
- Long version specifically designed for bridging non-load bearing layers.
- Silicone-free.

INSTALLATION

Type of installation
- Push-through installation.

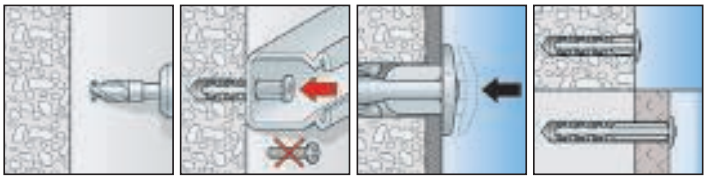

TECHNICAL DATA

SF plus SD

Type	Art. No.	Drill-hole d_0 [Ø mm]	min. drill hole depth t [mm]	Usable length d_a [mm]	Qty. per box pcs.
SF plus SD 30	**058178**	6	35	4	200
SF plus SD 40	**058179**	6	35	15	100

Breaking loads in concrete

Drill diameter across cutting edges [mm]	B Fits reaking load/ failure loads [kN]
6.0	0.6
6.1	0.56
6.2	0.52
6.3	0.47
6.4	0.43

ClipFix plus cable clasp KB / Cable clasp KB

OVERVIEW

SF plus KB

KB

Suitable for:
- Concrete
- Natural stone, dense structure
- Solid brick
- Solid sand-lime brick
- Solid block made from lightweight concrete

For fixing of:
- Electric conduits

DESCRIPTION

- Cable clasp for simple and time-saving fixing of electrical cables (optional without pre-fitted fixing pin).
- For ceiling, wall and floor installation.
- Available in RAL 7035 cable-grey and RAL 7030 dark grey (flame-resistant version).
- The pre-fitted fixing pin SD can be removed.
- The Cable clasp KB (without plug-fixing) is designed for installation with the Hammerfix N 6 (see fischer fixings catalogue).

Advantages/benefits

- The complete element combines clasp, plug and screw.
- Simple and quick one-hand installation reduces work involved by up to 80 %.
- Temperature-resistant from –20 °C to +80 °C.
- Unique operating principle guarantees high load-bearing capacity.
- High quality material permits year-round application, even when exposed to frost.
- Halogen-free and flame-resistant for increased safety in the event of fire.
- The shallow design of the clasp makes it ideal for use in confined spaces i.e. intermediate ceilings.
- Different colouring for differentiation from flame-resistant version.
- Silicone-free.

INSTALLATION

Type of installation

- Plug-fitting installation
- Hammer-in fixing – with Hammerfix N6

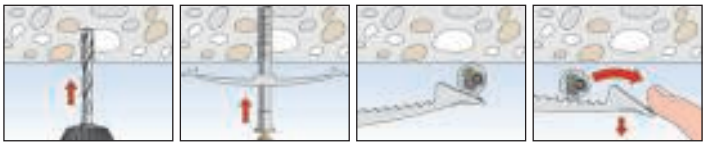

ClipFix plus cable clasp KB / Cable clasp KB

TECHNICAL DATA

SF plus KB 8

SF plus KB 16

Type	Art. No.	max. number of ducts	Drill-hole d_0 [Ø mm]	Drill hole depth h_0 [mm]	Qty. per box pcs.
SF plus KB 8	**048171**	8 ducts NYM 3 x 1.5	6	35	50
SF plus KB 16	**048172**	16 ducts NYM 3 x 1.5	6	35	25

Breaking loads in concrete

Drill diameter across cutting edges [mm]	Breaking load/ failure loads [kN]
6	0.6
6.1	0.56
6.2	0.52
6.3	0.47
6.4	0.43

KB 8

KB 16

Type	Art. No.	max. number of ducts	Dimensions [mm]	Dimension of slot [mm]	Qty. per box pcs.
KB 8	**058135**	8 ducts NYM 3 x 1.5	15 x 133	6 x 10	50
KB 16	**058136**	16 ducts NYM 3 x 1.5	15 x 230	6 x 10	50

Cable harness SHA

OVERVIEW

SHA, MS + KP

Installation base ClipFix plus SF plus MS

Suitable for:
- Concrete
- Natural stone, dense structure
- Solid brick
- Solid sand-lime brick
- Solid block made from lightweight concrete

For fixing of:
- Conduits
- Flexible and rigid plastic pipes

DESCRIPTION

- Cable harness for direct installation with plug and screw or the Installation base MS.
- Available in RAL 7035 cable-grey and RAL 7030 dark grey (flame-resistant version).

Advantages/benefits
- Simple and quick installation with Installation base MS and Connection piece KP.
- Temperature-resistant from –20 °C to +80 °C.
- High quality material permits year-round application, even when exposed to frost.

INSTALLATION

Installation tips
- Using the Connection piece SHA KP, two cable harnesses can be installed back-to-back with a single connection point.
- A clip-in base makes it possible to use a series of harnesses, mounted one below the other.
- Must not be installed more than 80 cm apart.

TECHNICAL DATA

Cable harness SHA

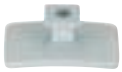

Installation base SHA MS

Connection piece SHA KP

Installation base ClipFix plus SF plus MS

Type	Art. No.	max. number of ducts	Dimensions [mm]	Qty. per box pcs.
SHA 15	**058139**	15 ducts NYM 3 x 1.5	92 x 63	50
SHA 30	**058140**	30 ducts NYM 3 x 1.5	127 x 79	25
SHA MS	**058141**	installation base	28 x 42	50
SHA KP	**058142**	connection piece	–	50
SF plus MS	**048181**	installation base with clip-plug	–	50

Nail clip NS / MNS

OVERVIEW

NS

Suitable for:
- Wood
- Hardboard
- Chipboard
- Plywood
- Aerated concrete
- Plaster wall

For fixing of:
- Conduits

DESCRIPTION

- Nail clip with pre-assembled hardened nail for the efficient installation of conduits.

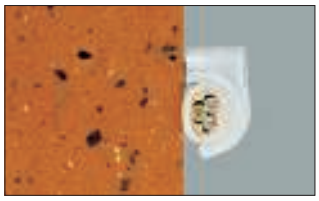

Advantages/benefits
- Simple and quick installation.
- Pre-assembled nail reduces installation time.
- Nail clip MNS for electric conduits with a wide diameter range.

TECHNICAL DATA

NS

Type	Art. No.	For cable [Ø mm]	Length of nail [mm]	Qty. per box pcs.
NS 7	**058173**	7	27	100
NS 8	**058174**	8	27	100
NS 9	**058175**	9	27	100
NS 10	**058176**	10	30	100
NS 12	**058177**	12	35	100

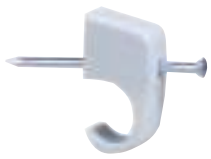

MNS

Type	Art. No.	Clamping range D [mm]	Length of nail [mm]	Qty. per box pcs.
MNS 5-7	**094673**	4 - 7	25	100
MNS 7-12	**094674**	7 - 12	30	100
MNS 10-14	**094675**	10 - 14	35	100

Nail disc NSB

OVERVIEW

NSB

Suitable for:
- Wood
- Hard board
- Chipboard
- Plywood
- Aerated concrete
- Plaster wall

For fixing of:
- Cables in wall slots

DESCRIPTION

- Polypropylen high-strength nail disc.

Advantages/benefits

- Only 1 disc for 2 slot widths.
- With the dimensions 27 mm and 34 mm the disc fits the most common slot widths.
- Pre-vaulted comb structure for optimum contact pressure.

TECHNICAL DATA

NSB

Type	Art. No.		Dimensions		Qty. per box	
			[mm]	[mm]	pcs.	
NSB 2/40	**048308**		2 x 40	27 x 34	200	
NSB 2/50	**048309**		2 x 50	27 x 34	150	
NSB 2/60	**048310**		2 x 60	27 x 34	100	
NSB 3/40	**048311**		3 x 40	27 x 34	150	
NSB 3/50	**048312**		3 x 50	27 x 34	150	
NSB 3/60	**048313**		3 x 60	27 x 34	100	

Cable tie BN

OVERVIEW

BN

UBN

For fixing of:
- Conduits
- flexible and rigid plastic pipes
- Metal conduits

DESCRIPTION

- Cable tie to bundle pipes and conduits.
- Self-extinguishing in compliance with UL 94 Class V2.

Advantages/benefits

- The chamfered end ensures it can be easily tightened in a simple operation.
- Temperature resistant in assembled situation from –40 °C to +80 °C.
- Recommended installation temp. up to –25 °C
- High quality nylon permits year-round application, even when exposed to frost.
- UV-stabilised material (only UBN, black), specifically for external use.
- Silicone and halogen-free and self-extinguishing, thereby increased safety in case of fire.
- Different colouring for differentiation from flame-resistant version.

TECHNICAL DATA

 BN **UBN**

Type	Art. No.	Dimensions [mm]	Qty. per box pcs.
BN 2.5 x 100	**087478**	2.5 x 100	100
BN 2.5 x 120	**087479**	2.5 x 120	100
BN 2.5 x 200	**087480**	2.5 x 200	100
BN 3.6 x 150	**087481**	3.6 x 150	100
BN 3.6 x 200	**019802**	3.6 x 200	100
BN 3.6 x 300	**037490**	3.6 x 300	100
BN 4.6 x 200	**087484**	4.6 x 200	100
BN 4.8 x 250	**037582**	4.8 x 250	100
BN 4.8 x 280	**087485**	4.8 x 280	100
BN 4.8 x 350	**037653**	4.8 x 350	100
BN 4.8 x 370	**037583**	4.8 x 370	100
BN 4.8 x 430	**037708**	4.8 x 430	100
BN 7.6 x 350	**087487**	7.6 x 350	100
BN 7.6 x 450	**037996**	7.6 x 450	100
BN 7.6 x 550	**037997**	7.6 x 550	100
BN 8.8 x 760	**037998**	8.8 x 760	100
BN 8.8 x 810	**038000**	8.8 x 810	100
BN 8.8 x 1168	**038002**	8.8 x 1168	100
UBN 2.5 x 100	**087488**	2.5 x 100	100
UBN 2.5 x 120	**087489**	2.5 x 120	100
UBN 2.5 x 200	**087490**	2.5 x 200	100
UBN 3.6 x 150	**087491**	3.6 x 150	100
UBN 3.6 x 200	**037573**	3.6 x 200	100
UBN 3.6 x 300	**069364**	3.6 x 300	100
UBN 4.6 x 200	**087494**	4.6 x 200	100
UBN 4.8 x 250	**069367**	4.8 x 250	100
UBN 4.8 x 280	**087495**	4.8 x 280	100
UBN 4.8 x 350	**069368**	4.8 x 350	100
UBN 4.8 x 370	**069369**	4.8 x 370	100
UBN 4.8 x 430	**069370**	4.8 x 430	100
UBN 7.6 x 350	**087497**	7.6 x 350	100
UBN 7.6 x 450	**069374**	7.6 x 450	100
UBN 7.6 x 550	**069375**	7.6 x 550	100
UBN 8.8 x 760	**069376**	8.8 x 760	100
UBN 8.8 x 810	**069377**	8.8 x 810	100
UBN 8.8 x 1168	**069379**	8.8 x 1168	100

ClipFix plus pipe clip RC

OVERVIEW

ClipFix plus pipe clip SF plus RC

Suitable for:
- Concrete
- Natural stone, dense structure
- Solid brick
- Solid sand-lime brick
- Solid block made from lightweight concrete

For fixing of:
- Plastic pipes according to DIN 49016. 49017 and IEC 423 (former DIN 49026).

DESCRIPTION

- Pipe clip with pre-fitted fixing pin for simple and time-saving plug-fitting of plastic insulation pipes.
- The pre-fitted fixing pin SD can be removed.

Advantages/benefits
- The complete element combines clip, plug and screw.
- Simple and quick one-hand installation reduces work involved by up to 80 %.
- Temperature resistant from –20 °C to +80 °C.
- Unique operating principle guarantees high load-bearing capacity.

- High quality material permits year-round application, even when exposed to frost.
- Halogen-free for increased safety in the event of fire.
- Silicone-free

INSTALLATION

Type of installation
- Plug-fitting installation.

Installation tips
- Interlocking base clips allow two additional pipe clips to be added in series.
- Only one fixing point for up to three pipes in a multiple installation is necessary.

TECHNICAL DATA

ClipFix plus pipe clip SF plus RC

Type	Art. No.	Drill-hole d_0 [Ø mm]	suitable for IEC	Clamping range D [mm]	Qty. per box pcs.
SF plus RC IEC 12	**048190**	6	12	12 - 13	100
SF plus RC IEC 16	**048191**	6	16	15 - 16	100
SF plus RC IEC 20	**048193**	6	20	20 - 21	100
SF plus RC IEC 25	**048197**	6	25	24 - 25	50
SF plus RC IEC 32	**048198**	6	32	31 - 32	25
SF plus RC IEC 40	**048199**	6	40	38 - 40	25

Further sizes and dimensions upon request.

Breaking loads in concrete

Drill diameter across cutting edges [mm]	Breaking load/ failure loads [kN]
6.0	0.6
6.1	0.56
6.2	0.52
6.3	0.47
6.4	0.43

Pipe clip RC

OVERVIEW

Pipe clip RC

For fixing of:
- Plastic pipes according to DIN 49016. 49017 and IEC 423 (former DIN 49026)

DESCRIPTION

- Polyamid pipe clip for simple and time-saving installation of plastic insulation pipes.

Advantages/benefits
- High quality material permits year-round application, even when exposed to frost.
- Temperature resistant from –20 °C to +80 °C.
- Halogen-free for increased safety in the event of fire.
- Silicone-free

INSTALLATION

Type of installation
- 6 mm oblong hole for easy installation with 6 mm hammerfix.
- Can be inserted into C-profiled channels with 11 mm slot width.

Installation tips
- Interlocking base clips allow two additional pipe clips to be added in series.
- Only one fixing point for up to three pipes in a multiple installation is necessary.

TECHNICAL DATA

Pipe clip RC

Type	Art. No.	suitable for IEC	Clamping range D [mm]	Dimension of slot [mm]	Qty. per box pcs.
RC IEC 12	**058194**	12	12 - 13	6 x 10	100
RC IEC 16	**058120**	16	15 - 16	6 x 10	100
RC IEC 20	**058122**	20	20 - 21	6 x 10	100
RC IEC 25	**058198**	25	24 - 25	6 x 10	50
RC IEC 32	**058199**	32	31 - 32	6 x 10	40
RC IEC 40	**058200**	40	39 - 40	6 x 10	40
RC IEC 50*	**079194**	50	50 - 51	6 x 10	20
RC IEC 63*	**079196**	63	62 - 64	6 x 10	15

* not addable in series

Pipe clip FC

OVERVIEW

FC

For fixing of:
- Conduits
- Flexible and rigid plastic pipes

DESCRIPTION

- Pipe Clip for efficient running of cables and pipelines.

Advantages/benefits
- Simple „snap-fit" system reduces installation time.
- Elastic properties allow for temperature-related changes in pipe lengths.
- High load-bearing capacity coupled with great flexibility.
- Temperature-resistant from –40 °C bis +80 °C.
- Elastic material permits year-round application, even when exposed to frost.

- Only four sizes for the 6 to 20 mm diameter range.
- Silicone-free.

INSTALLATION

Installation tips
- Interlocking base clips allow two additional clip brackets to be added in series.
- Can be inserted into C-shaped profile-rails with 11 mm wide slot.

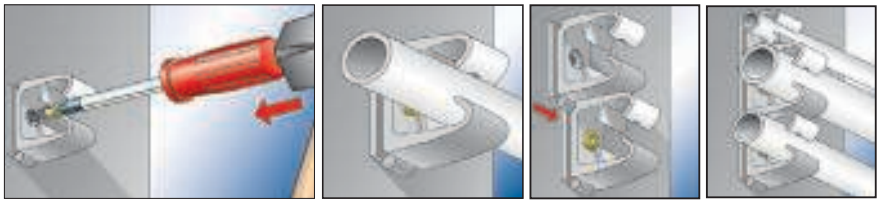

TECHNICAL DATA

FC

Type	Art. No.	for cables and pipes from / to d_{min} - d_{max} [Ø mm]	Qty. per box pcs.
FC 6 - 9 GR	**068060**	6 - 9	100
FC 9 - 12 GR	**068062**	9 - 12	100
FC 12 - 16 GR	**068064**	12 - 16	50
FC 16 - 20 GR	**068066**	16 - 20	25

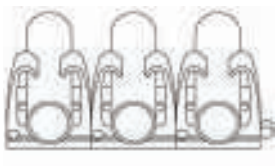

Nylon saddle SCH

OVERVIEW

Nylon saddle SCH

For fixing of:
- Conduits
- Flexible and rigid plastic pipes

DESCRIPTION

- Nylon saddle clip for efficient running of cables and pipe-lines with different diameters.

Advantages/benefits

- Spring pressure of internal tongues enables running of cables and pipes of different diameters.
- Temperature-resistant from –40 °C to +80 °C.
- High quality elastic material permits year-round application, even when exposed to frost.
- Silicone-free.

INSTALLATION

Installation tips

- Base interlocking system allows individual or multiple saddles SCH to be used together with varying sizes.

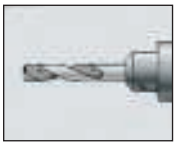

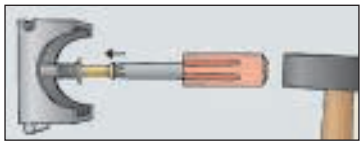

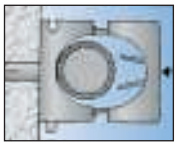

LOADS

Mean ultimate loads in [kN]
of upper part of clip to tensile force. An appropriate safety coefficient should be applied.

Type	kN
SCH 812	0,09
SCH 1216	0,2
SCH 1619	0,2
SCH 1623	0,2
SCH 2332	0,3

Important dimensions of fischer Saddle SCH for the installer

Type	Clamping range	h	b	s	a	l	t	c
SCH 812	8-12 Ø	23.1	21.5	16.5	6.1	12	4.5	5.1
SCH 1216	12-16 Ø	28.7	27.5	16.5	6.7	16	4.5	5.1
SCH 1619	16-19 Ø	37.6	32.5	16.5	8.0	18	4.5	5.1
SCH 1623	16-23 Ø	37.6	36.0	16.5	7.6	18	4.5	5.1
SCH 2332	23-32 Ø	50.0	46.5	16.5	10.0	28	4.5	5.1

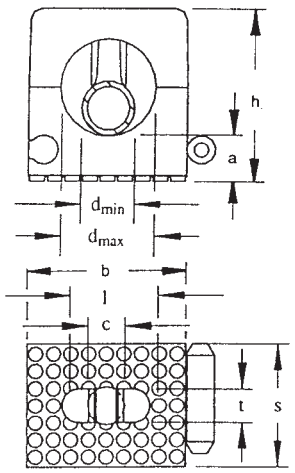

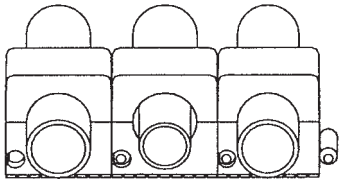

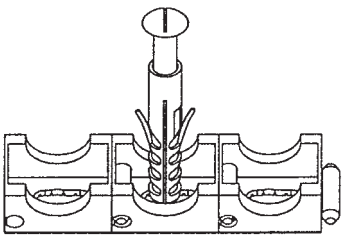

TECHNICAL DATA

Nylon saddle SCH
Nylon transparent

Nylon saddle SCH
grey RAL 7035

Type	Art. No.	for cables and pipes from / to d_{min} - d_{max} [Ø mm]	Dimension of insulated pipes
Colour: nylon transparent			
SCH 812	**060012**	8 - 12	6 x 1 - 8 x 1
SCH 1216	**060016**	12 - 16	10 x 1 - 12 x 1
SCH 1619	**069019**	16 - 19	-
SCH 1623	**060023**	16 - 23	15 x 1 - 18 x 1
SCH 2332	**060032**	23 - 32	22 x 1 - 22 x 1.5
SCH 3242	**060042**	32 - 42	22 x 1 - 22 x 1.5
Colour: grey RAL 7035			
SCH 812 GR	**068012**	8 - 12	6 x 1 - 8 x 1
SCH 1216 GR	**068016**	12 - 16	10 x 1 - 12 x 1
SCH 1619 GR	**068019**	16 - 19	-
SCH 1623 GR	**068023**	16 - 23	15 x 1 - 18 x 1
SCH 2332 GR	**068032**	23 - 32	22 x 1 - 22 x 1.5

Metal two-piece pipe clamp AM

OVERVIEW

AM

For fixing of:
- Metal conduits according to DIN 49020.

DESCRIPTION

Product description
- Metal clamp with M6 internal thread for stand-off installations of metal conduits according to DIN 49020.
- Pre-fitted with either a slotted or recessed screw head that promotes reduced installation time.
- Galvanised surface for corrosion protection.

Advantages/benefits
- Half-open locking latch allows easy opening without completely removing the screw.

INSTALLATION

Installation tips
- Can only be installed by using M6 bolt recess, e.g. stud screw STST 6x80 or nail plug N6x40 M6, nail anchor FNA II 6x40 M6, FNA II 6x25 M6, FNA II 6x30 M6x43, Art.No. 044110

TECHNICAL DATA

AM

Type	Art. No.	Dimension IEC	suitable for [Ø mm]	Qty. per box pcs.
AM 8	**60185**	-	8	50
AM 10	**60186**	-	10	50
AM 12	**60187**	12	12	50
AM 14	**60188**	-	14	50
AM 15/16	**60189**	16	15/16	50
AM 18	**60190**	-	18	50
AM 20	**60191**	20	20	50
AM 22	**60192**	-	22	50
AM 24	**60193**	-	24	50
AM 25/26	**60194**	25	25/26	50
AM 28	**60195**	-	28	50
AM 30	**60196**	-	30	50
AM 32	**60209**	32	32	25
AM 34	**60210**	-	34	25
AM 37	**60211**	37	37	20
AM 40	**90849**	40	40	15
AM 50	**90850**	50	50	10
AM 63	**90851**	63	63	10

Further sizes and dimensions upon request.

Conduit clip BSM

OVERVIEW

BSM

For fixing of:
- Conduits
- Flexible and rigid plastic pipes
- Metal conduits

DESCRIPTION

- Conduit metal clip with 1 or 2 fixing points.

Advantages/benefits
- Simple and quick installation.
- Galvanised surface ensures corrosion protection.

INSTALLATION

Installation tips
- When fixing to concrete, we recommend the Impact nail ED 15, 18 or 22 (see installation accessories).

TECHNICAL DATA

BSM

BSMD

BSMZ

Type	Art. No.	Dimension IEC	suitable for [Ø mm]	Qty. per box pcs.
BSM 16	**060149**	16	16	50
BSM 18	**060150**	-	18	50
BSM 20	**060151**	20	20	50
BSM 22	**060152**	-	22	50
BSM 24	**060153**	-	24	50
BSM 25	**090839**	25	25	50
BSM 28	**060155**	-	28	50
BSM 32	**090840**	32	32	50
BSM 37	**060158**	-	37	25
BSM 40	**090841**	40	40	25
BSM 50	**090842**	50	50	20
BSM 63	**090843**	63	63	15
BSMD 16	**060169**	16	16	50
BSMD 18	**060170**	-	18	50
BSMD 20	**060171**	20	20	50
BSMD 22	**060172**	-	22	50
BSMD 25	**090844**	25	25	50
BSMD 28	**060175**	-	28	25
BSMD 32	**090845**	32	32	25
BSMD 37	**060178**	-	37	25
BSMD 40	**090846**	40	40	25
BSMD 50	**090847**	50	50	15
BSMD 63	**090848**	63	63	10
BSMZ 20	**079535**	20	20	50
BSMZ 24	**079536**	-	24	50
BSMZ 28	**079537**	-	28	50

Textile web strappin GWB

Codes and characteristics see on page 143

Perforated steel banding LBV / LBK

Codes and characteristics see on page 144

Installation tools

Codes and characteristics see on page 145

Wireclip

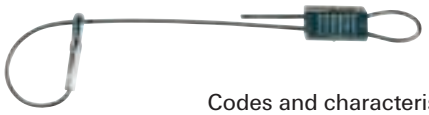

Codes and characteristics see on page 146

Sanitary fixings

Fixing sets
for sanitary installations like:

- **wash basin and urinal**
- **WC and bidet**
- **boiler and electrical equipment**
- **accessoires**

Wash basin/Urinal fixings
WD **Page 196**

WC and sanitary fixings
WCN **Page 199**

Accessories
BUM **Page 202**

WST, WST 140 FIP **Page 196**

UST **Page 196**

BO **Page 196**

KM **Page 196**

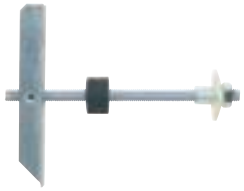

WDKM **Page 196**

S8D **Page 199**

S8RD **Page 199**

WL **Page 199**

WB5N **Page 201**

AKM **Page 202**

Wash basin and urinal fixings

Complete fixing sets.

OVERVIEW

WD – Wash basin and urinal fixing

WST – Wash basin fixings

UST – Urinal fixing

BO – Boiler fixing

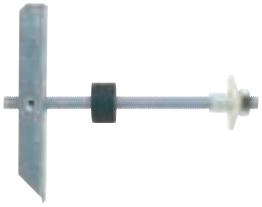

Gravity toggle KM 10
– Wash basin and urinal fixing

WDP – Wash basin and urinal fixing

DESCRIPTION

WD, WST, UST, BO

- Fixing sets consisting of UX-Plugs, stud screws, nylon nuts or flanged bushes with hexagon nut.

KM and WDP

- Specially designed for fixing washstands and urinals to plumbing units and cavity walls.

Advantages/benefits

- Simple and quick installation.
- High-strength nylon nuts and flanged bushes are resistant to ageing, chemicals and guarantees that the fitting will not damage the porcelain.
- Cover caps with a high-quality chrome finish ensure the fixture remains visually attractive for a long period of time.

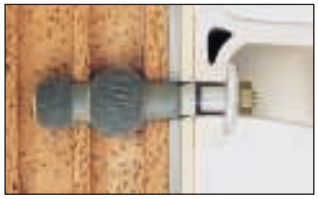

INSTALLATION

Type of installation

- Flush or stud-bolt installation

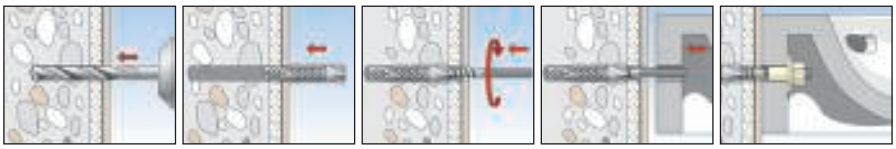

Installation tips

- Maximum load-bearing capacity is only achieved if the screw projects through the tip of the plug by at least 1 x screw diameter and the plug expands in the load-bearing anchoring base with its whole anchoring depth.
- Tiles and plaster are not classed as load-bearing.

TECHNICAL DATA

WD

Type	Art. No.	Contents per plastic bag	Qty. per box
		pcs.	pcs.
WD 8 x 90	**080659**	2 wall plugs UX 10 x 60, 2 stud screws M 8x90 zinc-plated, 2 flanged nuts BU M8, installation instructions	50
WD 8 x 110	**080658**	2 wall plugs UX 10 x 60, 2 stud screws M 8x110 zinc-plated, 2 flanged nuts BU M8, installation instructions	50
WD 10 x 120	**080655**	2 wall plugs UX 14 x 75, 2 stud screws M 10x120 zinc-plated, 2 flanged nuts BU M10, installation instructions	50
WD 10 x 140	**080656**	2 wall plugs UX 14 x 75, 2 stud screws M 10x140 zinc-plated, 2 flanged nuts BU M10, installation instructions	50

BO

Type	Art. No.	Contents per plastic bag	Qty. per box
		pcs.	pcs.
BO 120	**080654**	4 wall plugs UX 14 x 75, 4 stud screws M 10 x 120 zinc-plated, 4 flanged nuts BU M 10, installation instructions	25

WST

Type	Art. No.	Contents per plastic bag	Qty. per box
		pcs.	pcs.
WST 10 x 140	**080660**	2 wall plugs UX 14 x 75, 2 stud screws M 10x140 zinc-plated, 2 flanged nuts BDH M10, 2 hexagon nuts M10, installation instructions	50
WST 12 x 150	**080661**	2 wall plugs UX 14 x 75, 2 stud screws M 12 x 150 zinc-plated, 2 hexagon nuts M 12 zinc-plated, 2 flanged bushes BDH M 12, installation instructions	50
WST 12 x 180	**080662**	2 wall plugs UX 14 x 75, 2 stud screws M 12 x 180 zinc-plated, 2 hexagon nuts M 12 zinc-plated, 2 flanged bushes BDH M 12, installation instructions	50

Wash basin and urinal fixings

TECHNICAL DATA

UST 8 x 110

UST 10 x 120

Type	Art. No.	Contents per plastic bag	Qty. per box
		pcs.	pcs.
UST 8 x 110	**083578**	2 wall plugs UX 10 x 60, 2 stud screws M 8 x 110, 2 washers B 8.4 DIN 125, 2 plastic washer 8.4 x 20 x 1.5, 2 cap nuts FA 8, 2 cover caps chrome plated	50
UST 10 x 120	**080668**	2 wall plugs UX 14, 2 stud screws M 10 x 120, 2 flanged nuts BU M 10, 2 cover caps AKM 10 CR	10

WDP

Type	Art. No.	Thread	Length	Qty. per box
		M	L	
			[mm]	pcs.
WDP 10 x 170	**014320**	M 10	170	10

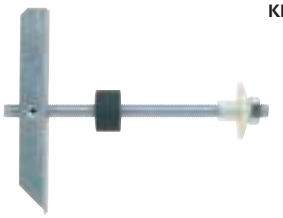

KM 10

Type	Art. No.	Drill	Anchor length	Min. cavity depth	Max. panel thickness	Screw	Qty. per box
		d_0	l	a	d_p	d_s x l_s	
		[mm]	[mm]	[mm]	[mm]	[mm]	pcs.
KM 10	**050326**	30	240	140	90	M 10 x 180	25

LOADS

Recommended loads N_{rec} [kN]

Anchor type	**UX 14 + Stud screw M10**
Building material	N_{rec}
Concrete ≧ C20/25	1,0
Solid pumice brick ≧ V2	0,1

WC and sanitary fixings

OVERVIEW

WCN

S 8 D 70 WCR

S 8 RD WCR

WL

DESCRIPTION

WCN
- Standard WC fixing with chrome or white coloured cap.
- Brass screw with hexagon head and slot.
- A large snap-fit sleeve compensates for fairly large or slightly mis-formed holes drilled through the porcelain.
- Also suitable for fixing mirrors and ceramic shelves.

S 8 D 70
- WC fixing with white and chrome-coloured cap.
- Brass screw with hexagon head and slot.

S 8 RD
- Standard WC fixing with white and chrome-coloured cap.
- Brass screw with hexagon head and slot.
- The plug's collar cleanly closes off the drill hole and enables the cap to fit securely into place.

WL
- Fixing set consisting of S-Plug, wood screw and washer.

Advantages/benefits
- Simple and quick installation.
- Shapely designed and easy to clean.
- Snap-fit sleeve ensures that the cap is seated securely and permanently.

INSTALLATION

Type of installation
- **WCN** and **S 8 D** prefered pre-positioned and push-through installation.
- **S 8 RD** for push-through installation.
- **WL** for pre-positioned installation.

WCN

S 8 RD

WC and sanitary fixing

TECHNICAL DATA

WCN

Type	Art. No.	Contents per plastic bag	Qty. per box
		pcs.	pcs.
WCN 1	**060561**	2 wall plugs S 8, 2 brass screws 6 x 70 hex. head, 2 cover caps white, 2 snap-fit sleeves	50
WCN 2	**060562**	2 wall plugs S 8, 2 brass screws 6 x 70 hex. head, 2 cover caps chrome, 2 snap-fit sleeves	50

S 8 D 70 WCR

Type	Art. No.	Contents per plastic bag	Qty. per box
		pcs.	pcs.
S 8 D 70 WCR	**060564**	2 wall plugs S 8, 2 brass screws 6 x 70 hex. head, 2 cover caps chrome and white, 2 snap-fit sleeves	50

S 8 RD WCR

Type	Art. No.	Contents per plastic bag	Qty. per box
		pcs.	pcs.
S 8 RD 60 WCR	**060570**	2 wall plugs S 8 RD 60, 2 brass screws 6 x 65 hex. head, 2 cover caps chrome and white	50
S 8 RD 80 WCR	**060568**	2 wall plugs S 8 RD 80, 2 brass screws 6 x 85 hex. head, 2 cover caps chrome and white	50
S 8 RD 80 W	**094694**	2 wall plugs S 8 RD 80, 2 screws 6 x 85 hex. head. DIN 571 zinc-plated, 2 cover caps white	50

WL

Type	Art. No.	Contents per plastic bag	Qty. per box
		pcs.	pcs.
WL 7 x 60	**080651**	2 wall plugs S 10, 2 screws 7 x 65 hex. head zinc-plated, 2 washers zinc-plated	100
WL 8 x 70	**080652**	2 wall plugs S 10, 2 screws 8 x 70 hex. head DIN 571 zinc-plated, 2 washers zinc-plated	100
WL 10 x 70	**080650**	2 wall plugs S 12, 2 screws 10 x 70 hex. head DIN 571 zinc-plated, 2 washers zinc-plated	50

WC fixing WB

OVERVIEW

WB 5N

DESCRIPTION

- The toilet fixing WB 5 N is an invisible fixing for standing WC's and bidets.

Advantages / Benefit

- The nylon flanged sleeves prevent direct contact between ceramic and screw therefore protecting the ceramic.
- Corrosion resistant material.

INSTALLATION

- The drill hole should be carefully cleaned

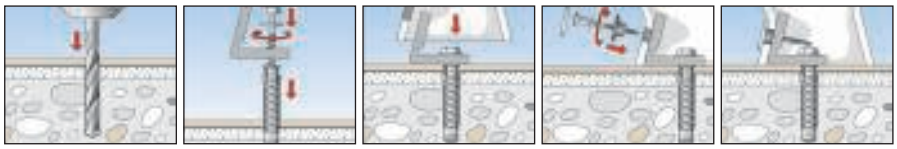

TECHNICAL DATA

Type	Art. No.	Qty. per box	Drill	min. drill hole depth	Contents
		pcs.	d_0 [mm]	t [mm]	
WB 5N	**018652**	50	10	70	2 plugs SX 10, 2 screws 7 x 60 zinc-plated, with welded washer, 2 nylon angles, 2 screws 5 x 45, A2 stainless steel, 2 flanged sleeves, 2 cover caps chrome

Accessories for sanitary fixings

OVERVIEW

BUM H

AKM

TECHNICAL DATA

Type	Art. No.	Thread M	Width across nut SW	Washer [min]	Fits	Qty. per box pcs.
BU M 8 MH	**060200**	M 8	17	40	STST M 8	25
BU M 10 MH	**060201**	M 10	17	40	STST M10	25
BU M 12 MH	**060204**	M 12	19	40	STS M 12	25

BUM H

Type	Art. No.	Colour	Fits	Qty. per box pcs.
AKM 10 W	**080972**	white	BU M10 MH	20
AKM 10 CR	**080951**	chrome	BU M10 MH	100
AKM 12 CR	**080952**	chrome	BU M12 MH	100

AKM

Installation tool HED for stud screw

OVERVIEW

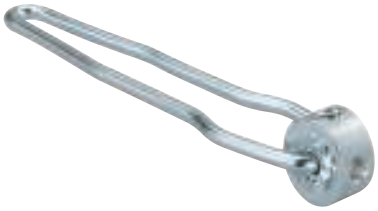

HED

DESCRIPTION

- Tool for installing stud screws.
- 4 thread sizes in one tool.

TECHNICAL DATA

Type	Art. No.	Thread	Qty. per box pcs.
HED	**079831**	M 6, M 8, M 10, M 12	1

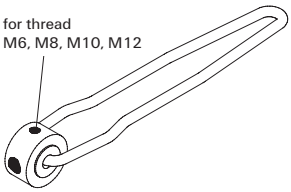

Plugs and Anchors

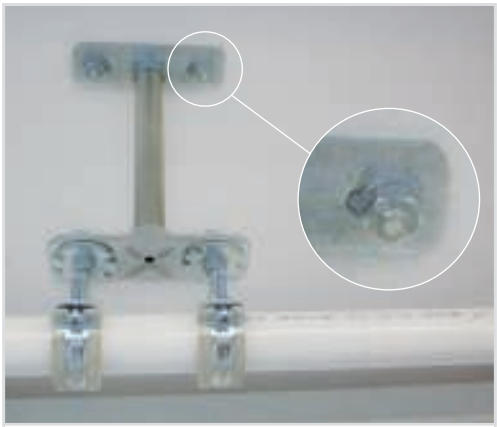

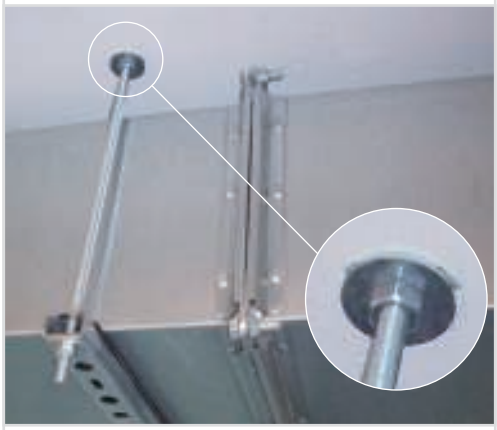

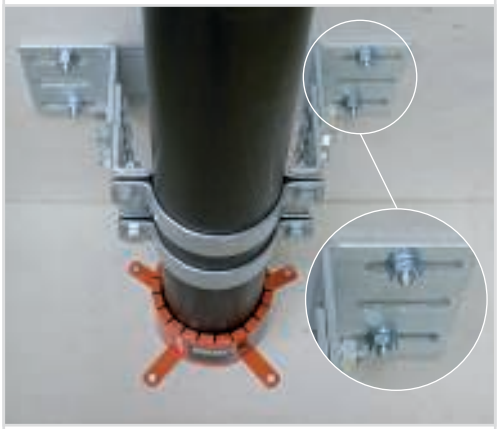

A selection from the fischer fixings range, ideal to be used with the fischer Installation Systems, for mechanical and electrical applications.

Plugs
UX **Page 206**

Cavity Fixings
KD **Page 212**

Metal anchors
FAZ II **Page 215**

Chemical
FIS V **Page 249**

Foams, sealants, adhesive
PUP B3 **Page 250**

SX **Page 209**

K **Page 212**

FBN II **Page 222**

FZEA II **Page 229**

EA II **Page 232**

FNA II **Page 235**

FHY **Page 239**

FBS **Page 245**

FIS VW HIGH SPEED **Page 249**

FIS VT 380 C **Page 249**

FIS VS LOW SPEED **Page 249**

FIS EM 390 S **Page 249**

FIS P 300 T **Page 249**

FIS P 380 C **Page 249**

PU 1 **Page 251**

PU 2/402 **Page 252**

PU 2/403 **Page 253**

DSSA **Page 256**

DSSI **Page 259**

KD **Page 258**

Universal plug UX

The nylon plug for all building materials.

Mirror fixings

Sanitary installations

BUILDING MATERIALS

- Concrete
- Gypsum plasterboard and gypsum fibreboards
- Vertically perforated brick
- Hollow block made from lightweight concrete
- Cavity floor slabs made of brick, concrete, etc.
- Perforated sand-lime brick
- Solid sand-lime brick
- Natural stone
- Aerated concrete
- Chipboard
- Solid panel made from gypsum
- Solid brick made from lightweight concrete
- Solid brick

CHARACTERISTICS

ADVANTAGES

- The universal operating principle (knotting or expanding) allows for use in all solid, hollow and board building materials. Thus the UX is the correct choice for unknown base materials.
- The UX's angled connection ridges allow for optimum screw guidance. Serrated anti-rotation locks prevent rotation in the drill hole. This guarantees the greatest possible installation safety.
- Fixing sets with screws, eye screws and hooks provide the right solution for all applications.

APPLICATIONS

- Pictures
- Lighting
- Skirting
- Wall cabinets
- Towel rails
- Mirror cabinets
- Curtain rails
- Wash basin fixings
- TV consoles
- Plumbing and heating fixings

FUNCTIONING

- The UX with rim is suitable for pre-positioned installation; the UX without rim is suitable for push-through installation.
- Turning in the screw causes the UX to expand in the solid building material and to knot within the cavity.
- The required screw length is given by the plug length + fixture thickness + 1 x screw diameter.
- Suitable for wood and chipboard screws, as well as stud screws.
- In the case of board building materials, the threadless part of the screw must not be longer than the fixture, and the UX with rim is to be used.
- The edge distance must be at least one plug length.

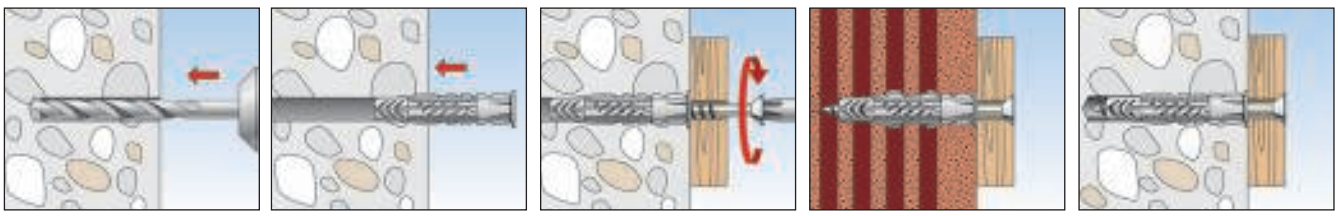

TECHNICAL DATA

UX - without rim

UX R - with rim

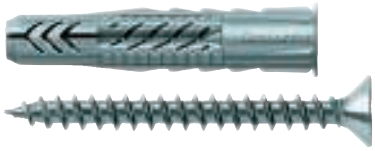

UX R S - with rim and screw

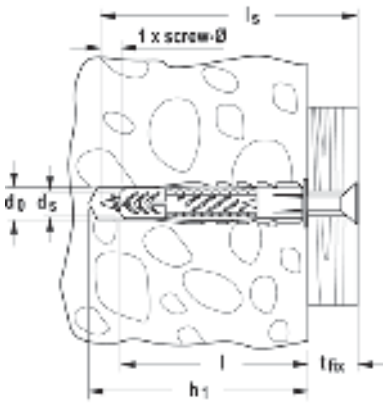

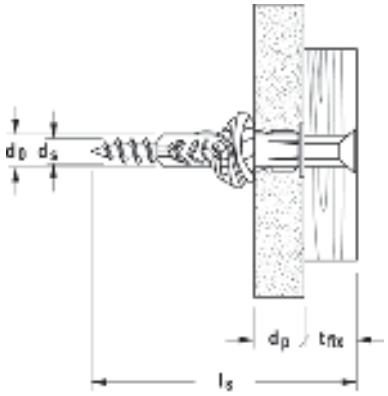

	without rim	with rim	with rim and screw	Drill hole diameter d_0	Min. drill hole depth h_1	Min. panel thickness d_p	Anchor length l	Wood and chip-board screws d_s / d_s x l_s	Max. fixture thickness t_{fix}	Sales unit
	Art.-No.	Art.-No.	Art.-No.	[mm]	[mm]	[mm]	[mm]	[mm]	[mm]	[pcs]
Item	**UX**	**UX R**	**UX R S**							
UX 5 x 30	**094721**	**094722**	–	5	40	9,5	30	3 - 4	–	100
UX 6 x 35	**062754**	**062756**	–	6	45	9,5	35	4 - 5	–	100
UX 6 x 35	–	–	**094758**	6	60	9,5	35	4,5 x 60	20	25
UX 6 x 50	**072094**	**072095**	–	6	60	9,5	50	4 - 5	–	100
UX 6 x 50	–	–	**094759**	6	75	9,5	50	4,5 x 75	20	25
UX 8 x 40	–	**505483**	–	8	50	9,5	40	4,5 - 6	–	100
UX 8 x 50	**077869**	**077870**	–	8	60	9,5	50	4,5 - 6	–	100
UX 8 x 50	–	–	**094762**	8	70	9,5	50	5 x 70	15	25
UX 8 x 50	–	–	**094760**	8	80	9,5	50	5 x 80	25	25
UX 10 x 60	**077871**	**077872**	–	10	75	12,5	60	6 - 8	–	50
UX 10 x 60	–	–	**094761**	10	85	12,5	60	6 x 85	20	10
UX 12 x 70	**062758**	–	–	12	85	–	70	8 - 10	–	25
UX 14 x 75	**062757**	–	–	14	95	–	75	10 - 12	–	20

TECHNICAL DATA

UX RH - with rim and round hook

UX WH - with rim and angle hook

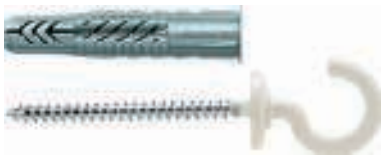

UX RH N - with rim and round hook (white coated)

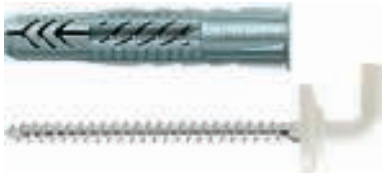

UX WH N - with rim and angle hook (white coated)

UX OH N - with rim and eyebolt (white coated)

	with rim and round hook	with round hook (white coated)	with rim and angle hook	with angle hook (white coated)	with eyebolt (white coated)	Drill hole diameter d_0	Min. drill hole depth h_1	Min. panel thickness d_p	Anchor length l	Dimension of hook screw d_s x l_s	Sales unit
	Art.-No.	Art.-No.	Art.-No.	Art.-No.	Art.-No.	[mm]	[mm]	[mm]	[mm]	[Ø mm]	[pcs]
Item	**RH**	**RH N**	**WH**	**WH N**	**OH N**						
UX 6 x 35	**094407**	–	–	–	–	6	45	9,5	35	4,5 x 67	25
UX 6 x 35	–	–	**094408**	–	–	6	45	9,5	35	4,5 x 51	25
UX 8 x 50	**094409**	**094412**	–	–	**094414**	8	60	9,5	50	5,5 x 87	25
UX 8 x 50	–	–	**094410**	**094413**	–	8	60	9,5	50	5,5 x 70	25

Universal plug UX

The nylon plug for all building materials.

TECHNICAL DATA

UX in bucket

Item	Art.-No.	Drill hole diameter d_0 [mm]	Min. drill hole depth h_1 [mm]	Min. panel thickness d_p [mm]	Fixing length l [mm]	Wood and chip-board screws d_s / d_s x l_s [mm]	Sales unit [pcs]
UX 6 x 35 R in bucket	**508027**	6	45	9,5	35	4 - 5	2500
UX 8 x 50 R in bucket	**508028**	8	60	9,5	50	4,5 - 6	1000
UX 10 x 60 R in bucket	**508029**	10	75	12,5	60	6 - 8	600

TECHNICAL DATA

Assortment box UX / SX

Box UX / SX-S

Item	Art.-No.	Contents	Sales unit [pcs]
Box UX 6/8/10	**093182**	100 plugs UX 6 x 35, 70 plugs UX 8 x 50, 20 plugs UX 10 x 60	1
Box UX-R 6/8/10	**093819**	100 plugs UX 6 x 35 R, 70 plugs UX 8 x 50 R, 20 plugs UX 10 x 60 R	1
Box UX / SX-S	**093181**	50 plugs UX 6 x 35, 50 screws 4,5 x 50, 50 plugs SX 6 x 30, 50 screws 4,5 x 45, 25 plugs UX 8 x 50, 25 screws 5 x 65, 25 plugs SX 8 x 40, 25 screws 5 x 50	1
Assortment box UX / SX	**040991**	60 plugs SX 6 x 30, 50 plugs SX 8 x 40, 20 plugs SX 10 x 50, 60 plugs UX 5 x 30 R, 40 plugs UX 6 x 50 R, 50 plugs UX 8 x 50 R, 10 plugs UX 10 x 60 R	1

LOADS

Universal plug UX

Highest recommended loads[1)] for a single anchor.
The given loads are valid for wood screws with the specified diameter.

Type			UX5	UX6	UX6 x 50	UX8	UX10	UX12	UX14
Screw diameter	Ø	[mm]	4	5	5	6	8	10	12
Recommended loads in the respective base material F_{rec}[2)]									
Concrete	≥ C20/25	[kN]	0,30	0,40	0,60	0,60	1,00	1,50	1,80
Solid brick	≥ Mz 12	[kN]	0,20	0,20	0,30	0,30	0,50	0,70	0,80
Hollow sand lime stone	≥ KSL 12	[kN]	0,30	0,40	0,40	0,50	0,60	0,80	0,80
Vertically perforated brick	≥ Hlz 12	[kN]	0,20	0,20	0,20	0,20	0,20	0,30	0,40
Aerated concrete	≥PB4, PP4 (G4)	[kN]	0,15	0,20	0,20	0,30	0,40	0,60	0,70
Gypsum plasterboard	12,5 mm	[kN]	0,10	0,10	0,10	0,10	0,10	-	-
Gypsum plasterboard	25 mm	[kN]	0,10	0,15	0,15	0,15	0,15	-	-
Gypsum fibreboard	(Fermacell)	[kN]	0,20	0,20	0,20	0,20	0,25	-	-
Plaster wall	ρ≥0,9 kg/dm³	[kN]	-	-	-	0,15	0,35	0,45	0,50

1) Includes the safety factor 7.

2) Valid for tensile load, shear load and oblique load under any angle.

LOADS

Universal plug UX with hook screws respective eye screws

Highest recommended loads[1)] for a single anchor. The given loads are valid for the included hook screws respective eye screws.

Type			UX6 RH	UX6 WH	UX8 RH	UX8 WH	UX8 OE
Recommended loads in the respective base material F_{rec}[2)]							
Concrete	≥ C20/25	[kN]	0,25	0,30	0,40	0,45	0,40
Vertically perforated brick	≥ Mz 12	[kN]	0,20	0,20	0,20	0,20	0,20
Gypsum plasterboard	12,5 mm	[kN]	0,05	0,05	0,05	0,05	0,05

1) Includes the safety factor 4 (failure by bending the hook).

2) Valid for tensile load, shear load and oblique load under any angle.

Expansion plug SX

The powerful nylon plug with 4-way expansion.

Wall consoles

Air conditioning units

BUILDING MATERIALS

- Concrete
- Vertically perforated brick
- Hollow block made from lightweight concrete
- Cavity floor slabs made of brick, concrete, etc.
- Perforated sand-lime brick
- Solid sand-lime brick
- Natural stone with dense structure
- Aerated concrete
- Solid panel made from gypsum
- Solid brick made from lightweight concrete
- Solid brick

CHARACTERISTICS

ADVANTAGES

- The 4-way expansion provides the optimum force distribution in the material, and offers high load-bearing capacities in solid and hollow building materials.
- The expansion-free plug neck prevents the creation of expansion forces on the material surface whilst screwing in the screw. This helps to prevent damage to tiles and plaster.
- The pronounced rim prevents the plug from slipping into the drill hole, thus allowing for a simple installation.
- The greater anchorage depth of the SX 6 x 50, 8 x 65 and 10 x 80 means that the plug is especially suited to fixings in hollow building materials, aerated concrete and to bridge plaster.

APPLICATIONS

- Lighting
- Wall cabinets
- Wardrobes
- Letterboxes
- TV consoles
- Trellis
- Folding shutters
- Handrails
- Light wells
- Bath and toilet installations

FUNCTIONING

- The SX is suitable for pre-positioned and push-through installation.
- When turning in the screw, the SX expands in four directions, thus providing a secure anchoring in the building material.
- The required screw length is given by: Plug length + fixture thickness + 1 x screw diameter.
- Suitable for wood, chipboard and spacing screws (fischer ASL, see main catalogue).

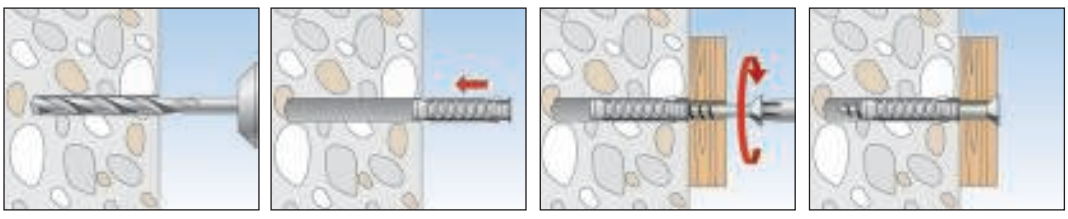

Expansion plug SX

The powerful nylon plug with 4-way expansion.

TECHNICAL DATA

Plug **SX** with rim

Plug **SX** - with greater anchorage depth, without rim

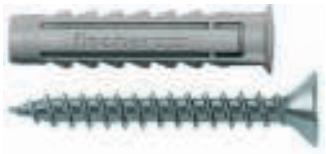

Plug **SX** with rim and screw

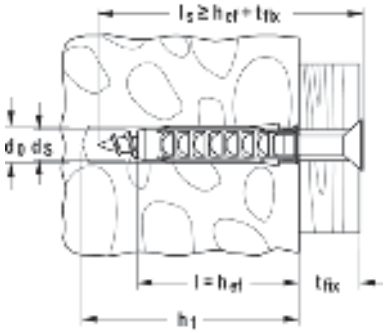

Item	with rim Art.-No.	with greater anchorage depth, without rim Art.-No.	with rim and screw Art.-No.	Drill hole diameter d_0 [mm]	Min. drill hole depth h_1 [mm]	Anchor length l [mm]	Max. fixture thickness t_{fix} [mm]	Wood and chip-board screws d_s / d_s x l_s [mm]	Sales unit [pcs]
SX 4 x 20	**070004**	–	–	4	25	20	–	2 - 3	200
SX 5 x 25	**070005**	–	–	5	35	25	–	3 - 4	100
SX 6 x 30	**070006**	–	–	6	40	30	–	4 - 5	100
SX 6 x 30	–	–	**070021**	6	40	30	10	4,5 x 40	50
SX 6 x 50	**078185**	**024827**	–	6	60	50	–	4 - 5	100
SX 8 x 40	**070008**	–	–	8	50	40	–	4,5 - 6	100
SX 8 x 40	–	–	**070022**	8	50	40	20	5 x 60	50
SX 8 x 65	–	**024828**	–	8	75	65	–	4,5 - 6	50
SX 10 x 50	**070010**	–	–	10	70	50	–	6 - 8	50
SX 10 x 80	–	**024829**	–	10	95	80	–	6 - 8	25
SX 12 x 60	**070012**	–	–	12	80	60	–	8 - 10	25
SX 14 x 70	**070014**	–	–	14	90	70	–	10 - 12	20
SX 16 x 80	**070016**	–	–	16	100	80	–	12 (1/2")	10

TECHNICAL DATA

SX in bucket

Item	Art.-No.	Drill hole diameter d_0 [mm]	Min. drill hole depth h_1 [mm]	Anchor length l [mm]	Max. fixture thickness t_{fix} [mm]	Wood and chip-board screws d_s [mm]	Sales unit [pcs]	
SX 6 in bucket	**507900**	6	40	30	–	4 - 5	3200	
SX 8 in bucket	**507904**	8	50	40	–	4,5 - 5	1200	
SX 10 in bucket	**507909**	10	70	50	–	6 - 8	720	

TECHNICAL DATA

Box SX 5/6/8

Box SX 6/8/10 transparent

Box UX / SX-S

Assortment box UX / SX

Item	Art.-No.	Contents	Sales unit [pcs]
Box SX 5/6/8	**030191**	100 plugs SX 5 x 25, 100 plugs SX 6 x 30, 100 plugs SX 8 x 40	1
Box SX 6/8/10 transparent	**041648**	60 plugs SX 6 x 30, 60 plugs SX 8 x 40, 12 plugs SX 10 x 50	1
Box UX / SX-S	**093181**	50 plugs UX 6 x 35, 50 screws 4,5 x 50, 50 plugs SX 6 x 30, 50 screws 4,5 x 45, 25 plugs UX 8 x 50, 25 screws 5 x 65, 25 plugs SX 8 x 40, 25 screws 5 x 50	1
Assortment box UX / SX	**040991**	60 plugs SX 6 x 30, 50 plugs SX 8 x 40, 20 plugs SX 10 x 50, 60 plugs UX 5 x 30 R, 40 plugs UX 6 x 50 R, 50 plugs UX 8 x 50 R, 10 plugs UX 10 x 60 R	1

LOADS

Plug SX

Highest recommended loads[1] for a single anchor.

The given loads are valid for wood screws with the specified diameter.

Type			SX 4 x 20	SX 5 x 25	SX 6 x 30 SX 6 x 50	SX 8 x 40 SX 8 x 65	SX 10 x 50	SX 10 x 80	SX 12 x 60	SX 14 x 70	SX 16 x 80
Screw diameter	Ø	[mm]	3	4	5	6	8	8	10	12	12
Min. edge distance in concrete	c_{min}	[mm]	-	-	35	40	50	50	65	100	120
Recommended loads in the respective base material F_{rec}[2]											
Concrete	≥ C20/25	[kN]	0,16	0,30	0,65	0,70	1,20	1,20	1,70	2,00	2,60
Solid brick	≥ Mz 12	[kN]	0,11	0,25	0,30	0,60	0,65	1,20	0,70	0,80	0,90
Solid sand lime stone	≥ KS 12	[kN]	0,17	0,30	0,50	0,60	1,20	1,20	1,70	2,00	2,60
Aerated concrete	≥ PB2, PP2 (G2)	[kN]	0,03	0,03	0,03	0,04	0,09	0,20	0,14	0,30	0,40
Aerated concrete	≥PB4, PP4 (G4)	[kN]	0,07	0,09	0,09	0,14	0,30	0,60	0,45	0,50	0,60
Vertically perforated bricks	≥ Hlz 12 ($\rho \geq 1.0$ kg/dm³)	[kN]	0,13	0,07	0,07	0,17	0,17	0,50	0,26	0,40	0,60
Perforated sand-lime brick	≥ KSL 12	[kN]	0,15	0,17	0,30	0,35	0,30	0,80	0,35	0,30	0,40
Plaster wall		[kN]	-	-	-	0,26	0,37	-	1,00	1,00	-

1) Includes the safety factor 7.

2) Valid for tensile load, shear load and oblique load under any angle.

Gravity- and spring-toggle K, KD, KDH, KM

The cavity fixing for different board thicknesses and large usage lengths

Ceiling lamps

Wash basins

BUILDING MATERIALS

- Gypsum plasterboard and gypsum fibreboards
- Cavity floor slabs made from bricks and concrete
- Chipboard
- Plywood

CHARACTERISTICS

ADVANTAGES

- The long threaded rod of the toggle fixings KD and KDH allows for use with different board thicknesses and thick attachments, and offers maximum flexibility.
- An integrated tension spring causes the catch elements of the spring toggles KD 3+4 and KDH 3+4 to open independently, thus allowing for a simple installation.
- The wide transition beams ensure a good load distribution. This achieves a high load-bearing capacity.
- The nylon gravity toggle K54 allows for the use of standard wood and chipboard screws.

APPLICATIONS

- Pictures
- Lighting
- Light shelves
- Towel rails
- Mirror cabinets
- Light cabinets
- Wash basins and urinals (KM 10)

FUNCTIONING

- The gravity and spring toggle are suitable for pre-positioned installation.
- When placed in the drill hole, the bearing elements of the gravity and spring toggles independently swing open behind the board.
- The KM 10 is specially suited to fixing wash basins and urinals into installation and cavity walls.
- No special installation tool required. For a fast and convenient installation.

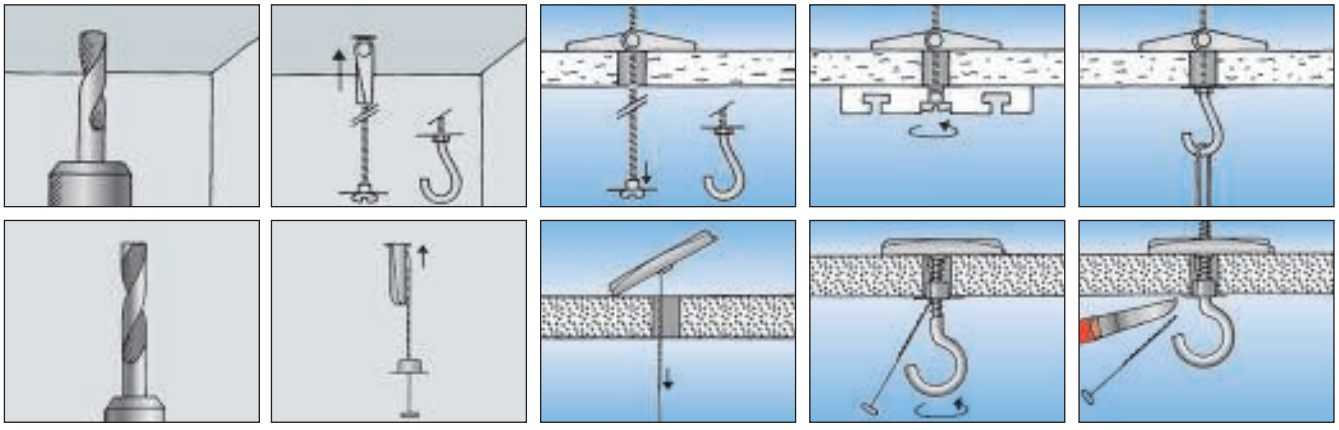

TECHNICAL DATA

Nylon toggle **K 54**

Item	Art.-No.	Drill hole diameter d_0 [mm]	Max. panel thickness d_p [mm]	Min. cavity depth a [mm]	Anchor length l [mm]	Thread Ø x length [mm]	Sales unit [pcs]
K 54	**050323**	10	65	58	125	woodscrew 4mm	25

TECHNICAL DATA

Spring toggle **KD 3 + 4**

Spring toggle **KDH 3 + 4**

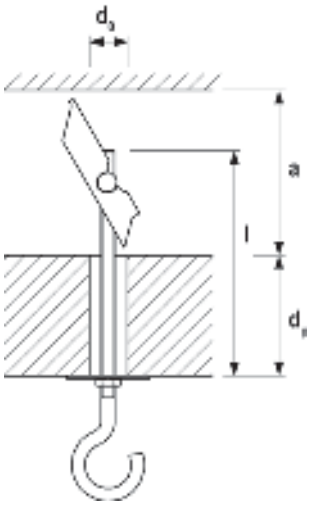

Item	Art.-No.	Drill hole diameter d_0 [mm]	Max. panel thickness d_p [mm]	Min. cavity depth a [mm]	Anchor length l [mm]	Thread Ø x length [mm]	Sales unit [pcs]
KD 3	**080181**	12	65	27	95	M 3 x 90	50
KDH 3	**080182**	12	51	27	105	M 3 x 80	25
KD 3 B	**080192**	12	65	27	95	M 3 x 90	10
KD 4	**080183**	14	69	34	105	M 4 x 100	25
KDH 4	**080184**	14	35	34	95	M 4 x 70	25
KD 4 B	**080193**	14	69	34	105	M 4 x 100	10

Gravity- and spring-toggle K, KD, KDH, KM

The cavity fixing for different board thicknesses and large usage lengths

TECHNICAL DATA

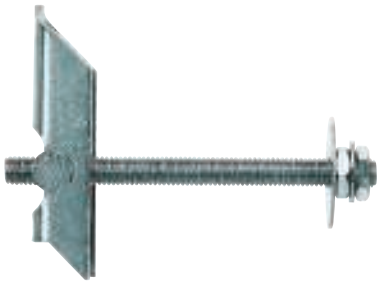

Gravity toggle **KD 5 + 6 + 8**

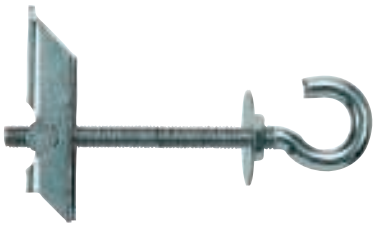

Gravity toggle **KDH 5 + 6 + 8**

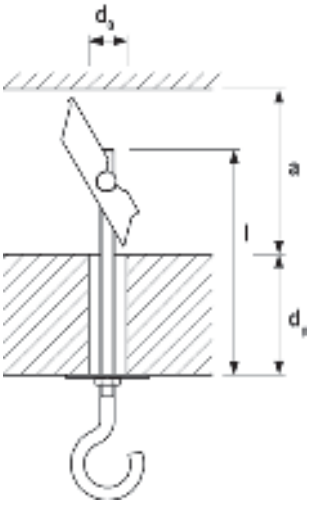

Item	Art.-No.	Drill hole diameter d_0 [mm]	Max. panel thickness d_p [mm]	Min. cavity depth a [mm]	Anchor length l [mm]	Thread Ø x length [mm]	Sales unit [pcs]
KD 5	**080187**	16	63	70	100	M 5 x 100	25
KDH 5	**080188**	16	60	70	130	M 5 x 90	20
KD 6	**080185**	16	63	70	100	M 6 x 100	25
KDH 6	**080186**	16	60	70	130	M 6 x 100	20
KD 8	**080178**	20	55	75	100	M 8 x 100	20
KDH 8	**080179**	20	55	75	130	M 8 x 100	20

TECHNICAL DATA

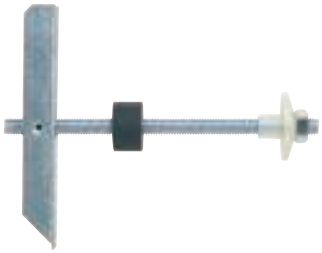

Gravity toggle **KM 10**

Item	Art.-No.	Drill hole diameter d_0 [mm]	Max. panel thickness d_p [mm]	Min. cavity depth a [mm]	Anchor length l [mm]	Screw d_S x l_S [mm]	Sales unit [pcs]
KM 10	**050326**	30	90	140	240	M 10 x 180	25

LOADS

Toggle fixing KD

Highest recommended loads[1] for a single anchor.

Type			KD3	KD4	KD5	KD6	KD8	KDH3	KDH4	KDH5	KDH6	KDH8
Thread size		[M]	M3	M4	M5	M6	M8	M3	M4	M5	M8	M10
Recommended loads in the respective base material F_{rec}[2]												
Max. possible recommended load[3]		[kN]	0,35	0,50	1,50	1,90	3,20	0,05	0,10	0,17	0,32	1,00
Gypsum plasterboard	12,5 mm	[kN]	0,05	0,10	0,15	0,20	0,25	0,05	0,10	0,15	0,20	0,25
Oriented strand board	15 mm	[kN]	0,35	0,40	0,40	0,50	0,60	-	-	-	-	-
Oriented strand board	22 mm	[kN]	-	-	-	0,80	1,20	-	-	-	-	-

1) Includes the safety factor 4.

2) Valid for tensile load, shear load and oblique load under any angle.

3) If the failure of the base material is not possible.

Bolt anchor FAZ II

Efficient fixing for cracked concrete.

Balcony railings

Cable trays

VERSIONS

- zinc-plated steel
- stainless steel
- highly corrosion-resistant steel

BUILDING MATERIALS

Approved for:

- Concrete C20/25 to C50/60, cracked and non-cracked

Also suitable for:

- Concrete C12/15
- Natural stone with dense structure

APPROVALS

ETA-05/0069
ETAG 001-2
Option 1 for cracked concrete

Rost frei

ESR-2948

Fire resistance classification R 120

M8 - M20

FM APPROVED from M10

ZTV 1200 °C

RWS 1350 °C

ADVANTAGES

- The optimised expansion clip allows for a high load-bearing capacity. Thus fewer fixing points and smaller anchor plates are required.
- The international approvals guarantee maximum safety and the best performance.
- The bolt geometry allows for optimal load distribution and therefore enables use close to edges and in thin components.
- Fewer hammer blows and the minimal torque slippage allow for a noticeably simpler installation.
- The drive-in pin protects the thread from damage and ensures a trouble-free dismantling of the fixture.

APPLICATIONS

- Steel constructions
- Guard rails
- Consoles
- Ladders
- Cable conduits
- Machines
- Staircases
- Gates
- Façades
- Wood constructions

FUNCTIONING

- The FAZ II is suitable for pre-positioned and push-through installation; also suitable for stand-off installation under certain conditions.
- Prior to installation, place the hexagon nut in the optimal position (the drive-in pin projects by approx. 3 mm out of the hexagon nut).
- When applying the torque, the cone bolt is pulled into the expansion clip and expands it against the drill hole wall.
- The head embossing offers a simple control of the anchoring.
- In the case of series installation, we recommend using the FABS anchor bolt setting tool.

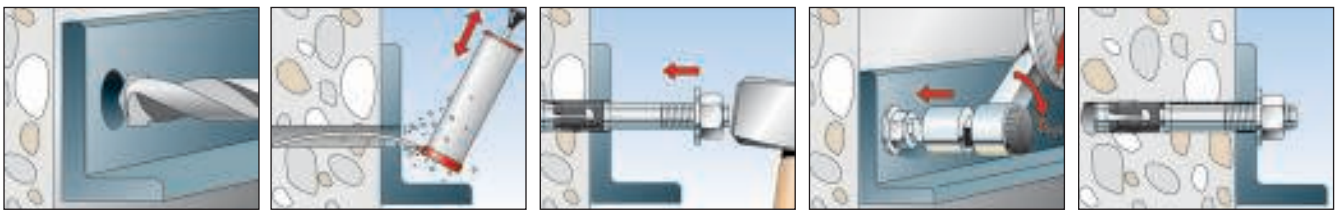

Bolt anchor FAZ II

Efficient fixing for cracked concrete.

TECHNICAL DATA

Bolt anchor **FAZ II**

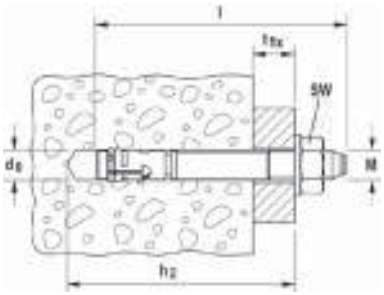

	zinc-plated steel	stainless steel	highly corrosion resistant steel	Approval		Drill hole diameter	Min. drill-hole depth for through fixings	Anchor length	Max. fixture thickness	Thread	Width across nut	Sales unit
	Art.-No.	Art.-No.	Art.-No.	ETA	ICC	d_0 [mm]	h_2 [mm]	l [mm]	t_{fix} [mm]	Ø x length [mm]	⬡ SW [mm]	[pcs]
Item	gvz	A4	C									
FAZ II 8/10	094871	501396	–	■	▲	8	65	75	10	M 8 x 21	13	50
FAZ II 8/10	–	–	501428	■	▲	8	65	75	10	M 8 x 21	13	10
FAZ II 8/30	094877	501399	–	■	▲	8	85	95	30	M 8 x 41	13	50
FAZ II 8/30	–	–	501429	■	▲	8	85	95	30	M 8 x 41	13	10
FAZ II 8/50	094878	501401	–	■	▲	8	105	115	50	M 8 x 61	13	50
FAZ II 8/100	094879	–	–	■	▲	8	155	165	100	M 8 x 100	13	25
FAZ II 8/160	503251	–	–	■	▲	8	215	225	160	M 8 x 100	13	20
FAZ II 10/10	094981	501403	–	■	▲	10	85	95	10	M 10 x 24	17	50
FAZ II 10/10	–	–	501430	■	▲	10	85	95	10	M 10 x 24	17	10
FAZ II 10/20	094982	–	–	■	▲	10	95	105	20	M 10 x 34	17	25
FAZ II 10/20	–	501406	–	■	▲	10	95	105	20	M 10 x 34	17	50
FAZ II 10/30	094983	–	–	■	▲	10	105	115	30	M 10 x 44	17	25
FAZ II 10/30	–	501407	–	■	▲	10	105	115	30	M 10 x 44	17	50
FAZ II 10/30	–	–	503185	■	▲	10	105	115	30	M 10 x 44	17	10
FAZ II 10/50	094984	501409	–	■	▲	10	125	135	50	M 10 x 64	17	20
FAZ II 10/70	–	501410	–	■	▲	10	145	155	70	M 10 x 84	17	20
FAZ II 10/80	094985	–	–	■	▲	10	155	165	80	M 10 x 94	17	20
FAZ II 10/100	094986	501411	–	■	▲	10	175	185	100	M 10 x 100	17	20
FAZ II 10/160	503252	501412	–	■	▲	10	235	245	160	M 10 x 100	17	20
FAZ II 12/10	095419	501413	–	■	▲	12	100	110	10	M 12 x 27	19	20
FAZ II 12/10	–	–	503186	■	▲	12	100	110	10	M 12 x 27	19	10
FAZ II 12/20	095420	501415	–	■	▲	12	110	120	20	M 12 x 37	19	20
FAZ II 12/30	095421	501416	–	■	▲	12	120	130	30	M 12 x 47	19	20
FAZ II 12/30	–	–	501431	■	▲	12	120	130	30	M 12 x 47	19	10
FAZ II 12/50	095446	501419	–	■	▲	12	140	150	50	M 12 x 67	19	20
FAZ II 12/60	–	501420	–	■	▲	12	150	160	60	M 12 x 77	19	20
FAZ II 12/80	095454	–	–	■	▲	12	170	180	80	M 12 x 97	19	20
FAZ II 12/100	095470	501421	–	■	▲	12	190	200	100	M 12 x 100	19	20
FAZ II 12/160	503253	–	–	■	▲	12	250	260	160	M 12 x 100	19	10
FAZ II 12/160	–	503180	–	■	▲	12	250	260	160	M 12 x 100	19	20
FAZ II 12/200	095605	–	–	■	▲	12	290	300	200	M 12 x 100	19	10
FAZ II 16/25	–	501423	–	■	▲	16	135	148	25	M 16 x 47	24	20
FAZ II 16/25	095836	–	501432	■	▲	16	135	148	25	M 16 x 47	24	10
FAZ II 16/50	095864	–	503187	■	▲	16	160	173	50	M 16 x 72	24	10
FAZ II 16/50	–	501424	–	■	▲	16	160	173	50	M 16 x 72	24	20
FAZ II 16/100	095865	501425	–	■	▲	16	210	223	100	M 16 x 100	24	10
FAZ II 16/160	503254	–	–	■	▲	16	270	283	160	M 16 x 100	24	10
FAZ II 16/200	095967	–	–	■	▲	16	310	323	200	M 16 x 100	24	10
FAZ II 16/250	095968	–	–	■	▲	16	360	373	250	M 16 x 100	24	10
FAZ II 16/300	096188	–	–	■	▲	16	410	423	300	M 16 x 100	24	10
FAZ II 20/30	046632	–	–	■	▲	20	155	172	30	M 20 x 54	30	5
FAZ II 20/30	–	501426	–	■	▲	20	155	172	30	M 20 x 54	30	4
FAZ II 20/60	046633	–	–	■	▲	20	185	202	60	M 20 x 84	30	5
FAZ II 20/60	–	503183	–	■	▲	20	185	202	60	M 20 x 84	30	4
FAZ II 20/160	503255	–	–	■	▲	20	285	302	160	M 20 x 100	30	5
FAZ II 24/30	046635	–	–	■	▲	24	185	205	30	M 24 x 58	36	5
FAZ II 24/30	–	501427	–	■	▲	24	185	205	30	M 24 x 58	36	4

TECHNICAL DATA

Bolt anchor **FAZ II**

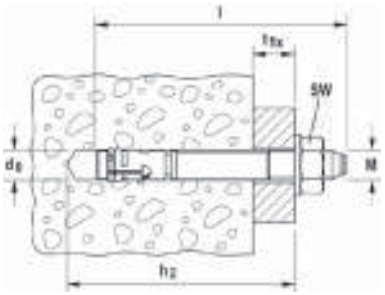

	zinc-plated steel	stainless steel	highly corrosion resistant steel	Approval		Drill hole diameter	Min. drill-hole depth for through fixings	Anchor length	Max. fixture thickness	Thread	Width across nut	Sales unit
	Art.-No.	Art.-No.	Art.-No.	ETA	ICC	d_0 [mm]	h_2 [mm]	l [mm]	t_{fix} [mm]	Ø x length [mm]	⬡ SW [mm]	[pcs]
Item	**gvz**	**A4**	**C**									
FAZ II 24/60	**046636**	–	–	■	▲	24	215	235	60	M 24 x 88	36	5
FAZ II 24/60	–	**503184**	–	■	▲	24	215	235	60	M 24 x 88	36	4

ACCESSORIES

fischer Anchor bolt setting tool **FABS**

Item	Art.-No.	Fits anchor	Sales unit [pcs]
FABS	**077937**	FAZ II, FBN II, EXA for diameter from M6 - M12	1

LOADS

Bolt anchor FAZ II

Highest permissible loads for a single anchor[1] in concrete C20/25[4]

For the design the complete approval ETA - 05/0069 has to be considered.

				Cracked concrete				Non-cracked concrete			
Type	Effective anchorage depth h_{ef} [mm]	Min. member thickness[5] h_{min} [mm]	Installation torque T_{inst} [Nm]	Permissible tensile load N_{perm}[3] [kN]	Permissible shear load V_{perm}[3] [kN]	Min. spacing s_{min}[2] [mm]	Min. edge distance c_{min}[2] [mm]	Permissible tensile load N_{perm}[3] [kN]	Permissible shear load V_{perm}[3] [kN]	Min. spacing s_{min}[2] [mm]	Min. edge distance c_{min}[2] [mm]
FAZ II 8	45	100	20,0	2,4	6,9	35	40	4,3	6,9	40	40
FAZ II 10	60	120	45,0	4,3	11,4	40	45	7,6	11,4	40	45
FAZ II 12	70	140	60,0	7,6	16,9	45	55	11,9	16,9	50	55
FAZ II 16	85	170	110,0	13,4	31,4	60	65	18,8	31,4	60	65
FAZ II 20	100	200	200,0	17,1	40,0	95	85	24,0	40,0	95	95
FAZ II 24	125	250	270,0	24,0	49,1	100	100	33,6	49,1	100	135

1) The partial safety factors for material resistance as regulated in the approval as well as a partial safety factor for load actions of $\gamma_L = 1,4$ are considered. As an single anchor counts e.g. an anchor with a spacing $s \geq 3 \times h_{ef}$ and an edge distance $c \geq 1,5 \times h_{ef}$. Accurate data see approval.

2) Minimum possible axial spacings resp. edge distance while reducing the permissible load for the minimum member thickness ($h_{min} \geqq 2 \times h_{ef}$). The combination of the given min. spacing and min. edge distance is not possible. One of them has to be increased according approval.

3) For combination of tensile loads, shear loads, bending moments as well as reduced edge distances or spacings (anchor groups) see approval.

4) For higher concrete strength classes up to C50/60 higher permissible loads may be possible.

5) According approval the minimum member thickness ($h_{min} \geqq 2 \times h_{ef}$) can be reduced under specific conditions.

Bolt anchor FAZ II

Efficient fixing for cracked concrete.

LOADS

Bolt anchor FAZ II A4

Highest permissible loads for a single anchor[1] in concrete C20/25[4]

For the design the complete approval ETA - 05/0069 has to be considered.

				Cracked concrete				Non-cracked concrete			
Type	**Effective anchorage depth** h_{ef} [mm]	**Min. member thickness**[5] h_{min} [mm]	**Installation torque** T_{inst} [Nm]	**Permissible tensile load** N_{perm}[3] [kN]	**Permissible shear load** V_{perm}[3] [kN]	**Min. spacing** s_{min}[2] [mm]	**Min. edge distance** c_{min}[2] [mm]	**Permissible tensile load** N_{perm}[3] [kN]	**Permissible shear load** V_{perm}[3] [kN]	**Min. spacing** s_{min}[2] [mm]	**Min. edge distance** c_{min}[2] [mm]
FAZ II 8 A4	45	100	20,0	2,4	6,9	35	40	4,3	6,9	40	40
FAZ II 10 A4	60	120	45,0	4,3	11,4	40	45	7,6	11,4	40	45
FAZ II 12 A4	70	140	60,0	7,6	16,9	45	55	11,9	16,9	50	55
FAZ II 16 A4	85	170	110,0	13,4	31,4	60	65	18,8	31,4	60	65
FAZ II 20 A4	100	200	200,0	17,1	40,0	95	85	24,0	40,0	95	95
FAZ II 24 A4	125	250	270,0	24,0	49,1	100	100	33,6	49,1	100	135

1) The partial safety factors for material resistance as regulated in the approval as well as a partial safety factor for load actions of $\gamma_L = 1,4$ are considered. As an single anchor counts e.g. an anchor with a spacing $s \geq 3 \times h_{ef}$ and an edge distance $c \geq 1,5 \times h_{ef}$. Accurate data see approval.

2) Minimum possible axial spacings resp. edge distance while reducing the permissible load for the minimum member thickness ($h_{min} \geq 2 \times h_{ef}$). The combination of the given min. spacing and min. edge distance is not possible. One of them has to be increased according approval.

3) For combination of tensile loads, shear loads, bending moments as well as reduced edge distances or spacings (anchor groups) see approval.

4) For higher concrete strength classes up to C50/60 higher permissible loads may be possible.

5) According approval the minimum member thickness ($h_{min} \geq 2 \times h_{ef}$) can be reduced under specific conditions.

LOADS

Bolt anchor FAZ II C

Highest permissible loads for a single anchor[1] in concrete C20/25[4]

For the design the complete approval ETA - 05/0069 has to be considered.

				Cracked concrete				Non-cracked concrete			
Type	**Effective anchorage depth** h_{ef} [mm]	**Min. member thickness**[5] h_{min} [mm]	**Installation torque** T_{inst} [Nm]	**Permissible tensile load** N_{perm}[3] [kN]	**Permissible shear load** V_{perm}[3] [kN]	**Min. spacing** s_{min}[2] [mm]	**Min. edge distance** c_{min}[2] [mm]	**Permissible tensile load** N_{perm}[3] [kN]	**Permissible shear load** V_{perm}[3] [kN]	**Min. spacing** s_{min}[2] [mm]	**Min. edge distance** c_{min}[2] [mm]
FAZ II 8 C	45	100	20,0	2,4	6,9	35	40	4,3	6,9	40	40
FAZ II 10 C	60	120	45,0	4,3	11,4	40	45	7,6	11,4	40	45
FAZ II 12 C	70	140	60,0	7,6	16,9	45	55	11,9	16,9	50	55
FAZ II 16 C	85	170	110,0	13,4	31,4	60	65	18,8	31,4	60	65
FAZ II 20 C	100	200	200,0	17,1	40,0	95	85	24,0	40,0	95	95
FAZ II 24 C	125	250	270,0	24,0	49,1	100	100	33,6	49,1	100	135

1) The partial safety factors for material resistance as regulated in the approval as well as a partial safety factor for load actions of $\gamma_L = 1,4$ are considered. As an single anchor counts e.g. an anchor with a spacing $s \geq 3 \times h_{ef}$ and an edge distance $c \geq 1,5 \times h_{ef}$. Accurate data see approval.

2) Minimum possible axial spacings resp. edge distance while reducing the permissible load for the minimum member thickness ($h_{min} \geq 2 \times h_{ef}$). The combination of the given min. spacing and min. edge distance is not possible. One of them has to be increased according approval.

3) For combination of tensile loads, shear loads, bending moments as well as reduced edge distances or spacings (anchor groups) see approval.

4) For higher concrete strength classes up to C50/60 higher permissible loads may be possible.

5) According approval the minimum member thickness ($h_{min} \geq 2 \times h_{ef}$) can be reduced under specific conditions.

Bolt anchor FAZ II GS

Economic fixing for cracked concrete with large washer.

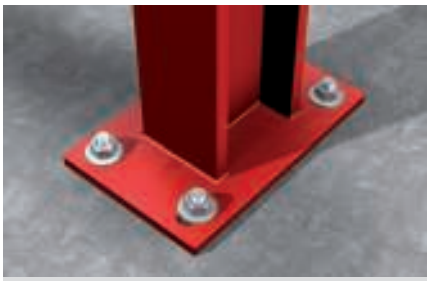

Column bases with long holes

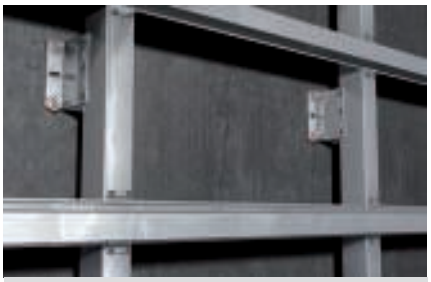

Steel sub-structures

VERSIONS

- zinc-plated steel
- stainless steel

BUILDING MATERIALS

Approved for:

- Concrete C20/25 to C50/60, cracked and non-cracked

Also suitable for:

- Concrete C12/15
- Natural stone with dense structure

APPROVALS

ETA-05/0069
ETAG 001-2
Option 1 for cracked concrete

ESR-2345

Fire resistance classification R 120

Rost frei

M8 - M20

FM APPROVED from M10

ADVANTAGES

- The FAZ II GS with 8, 10 and 12 mm diameters are suitable for fixing steel fixtures with long holes thanks to the special washer, and help to reduce installation effort.
- The significantly larger outer diameter of the washers for FAZ II 16 GS ensures a larger supporting surface, and as such allows for use in wood construction.
- The pre-fitted washer ensures a fast installation.
- Furthermore, the FAZ II GS bolt anchor offers all of the benefits of the FAZ II.

APPLICATIONS

- Anchor plates with long holes
- Façade sub-structures with long holes
- Wood constructions

FUNCTIONING

- The FAZ II is suitable for pre-positioned and push-through installation; also suitable for stand-off installation under certain conditions.
- Prior to installation, place the hexagon nut in the optimal position (the drive-in pin projects by approx. 3 mm out of the hexagon nut).
- When applying the torque, the cone bolt is pulled into the expansion clip and expands it against the drill hole wall.
- The head embossing offers a simple control of the anchoring.
- In the case of series installation, we recommend using the FABS bolt anchor setting tool.

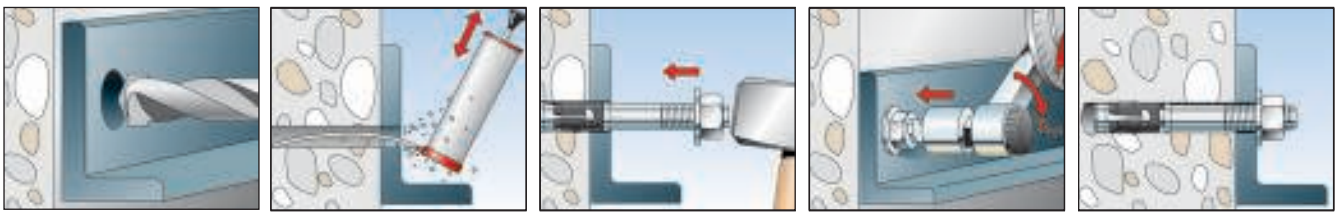

Bolt anchor FAZ II GS

Economic fixing for cracked concrete with large washer.

TECHNICAL DATA

Bolt anchor **FAZ II GS** (with large washer)

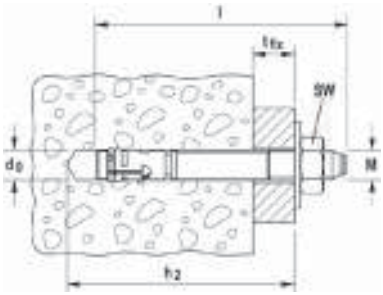

	steel, zinc-plated, with large washer	stainless steel, with large washer	Approval	Drill hole diameter	Min. drill-hole depth for through fixings	Anchor length	Max. fixture thickness	Thread	Width across nut	Washer (outer diameter x thickness)	Sales unit
	Art.-No.	Art.-No.	ETA	d_0 [mm]	h_2 [mm]	l [mm]	t_{fix} [mm]	Ø x length [mm]	⬡ SW [mm]	[mm]	[pcs]
Item	**gvz**	**A4**									
FAZ II 8/10 GS	**094872**	**501398**	■	8	65	75	10	M 8 x 21	13	22 x 2,5	50
FAZ II 8/30 GS	**096189**	**501400**	■	8	85	95	30	M 8 x 41	13	22 x 2,5	50
FAZ II 10/10 GS	**096291**	**501405**	■	10	85	95	10	M 10 x 24	17	25 x 3	50
FAZ II 10/30 GS	**096297**	–	■	10	105	115	30	M 10 x 44	17	25 x 3	25
FAZ II 10/30 GS	–	**501408**	■	10	105	115	30	M 10 x 44	17	25 x 3	50
FAZ II 12/10 GS	**096303**	**501414**	■	12	100	110	10	M 12 x 27	19	30 x 3	20
FAZ II 12/20 GS	**502530**	–	■	12	110	120	20	M 12 x 37	19	30 x 3	20
FAZ II 12/30 GS	**096340**	**501418**	■	12	120	130	30	M 12 x 47	19	30 x 3	20
FAZ II 12/50 GS	**502531**	–	■	12	140	150	50	M 12 x 67	19	30 x 3	20
FAZ II 12/100 GS	**502532**	–	■	12	190	200	100	M 12 x 100	19	30 x 3	20
FAZ II 12/120 GS	**096367**	–	■	12	210	220	120	M 12 x 100	19	30 x 3	20
FAZ II 12/160 GS	–	**503181**	■	12	250	260	160	M 12 x 100	19	44 x 4	20
FAZ II 16/160 GS	**503261**	–	■	16	270	283	160	M 16 x 100	24	56 x 5	10
FAZ II 16/160 GS	–	**503182**	■	16	270	283	160	M 16 x 100	24	56 x 5	4
FAZ II 16/200 GS	**096370**	–	■	16	310	323	200	M 16 x 100	24	56 x 5	10

LOADS

Bolt anchor FAZ II GS

Highest permissible loads for a single anchor[1] in concrete C20/25[4]

For the design the complete approval ETA - 05/0069 has to be considered.

				Cracked concrete				Non-cracked concrete			
Type	**Effective anchorage depth** h_{ef} [mm]	**Min. member thickness**[5] h_{min} [mm]	**Installation torque** T_{inst} [Nm]	**Permissible tensile load** N_{perm}[3] [kN]	**Permissible shear load** V_{perm}[3] [kN]	**Min. spacing** s_{min}[2] [mm]	**Min. edge distance** c_{min}[2] [mm]	**Permissible tensile load** N_{perm}[3] [kN]	**Permissible shear load** V_{perm}[3] [kN]	**Min. spacing** s_{min}[2] [mm]	**Min. edge distance** c_{min}[2] [mm]
FAZ II 8 GS	45	100	20,0	2,4	6,9	35	40	4,3	6,9	40	40
FAZ II 10 GS	60	120	45,0	4,3	11,4	40	45	7,6	11,4	40	45
FAZ II 12 GS	70	140	60,0	7,6	16,9	45	55	11,9	16,9	50	55
FAZ II 16 GS	85	170	110,0	13,4	31,4	60	65	18,8	31,4	60	65

1) The partial safety factors for material resistance as regulated in the approval as well as a partial safety factor for load actions of $\gamma_L = 1,4$ are considered. As an single anchor counts e.g. an anchor with a spacing $s \geq 3 \times h_{ef}$ and an edge distance $c \geq 1,5 \times h_{ef}$. Accurate data see approval.

2) Minimum possible axial spacings resp. edge distance while reducing the permissible load for the minimum member thickness ($h_{min} \geq 2 \times h_{ef}$). The combination of the given min. spacing and min. edge distance is not possible. One of them has to be increased according approval.

3) For combination of tensile loads, shear loads, bending moments as well as reduced edge distances or spacings (anchor groups) see approval.

4) For higher concrete strength classes up to C50/60 higher permissible loads may be possible.

5) According approval the minimum member thickness ($h_{min} \geq 2 \times h_{ef}$) can be reduced under specific conditions.

LOADS

Bolt anchor FAZ II GS A4

Highest permissible loads for a single anchor[1] in concrete C20/25[4]

For the design the complete approval ETA - 05/0069 has to be considered.

				Cracked concrete				Non-cracked concrete			
Type	**Effective anchorage depth** h_{ef} [mm]	**Min. member thickness**[5] h_{min} [mm]	**Installation torque** T_{inst} [Nm]	**Permissible tensile load** N_{perm}[3] [kN]	**Permissible shear load** V_{perm}[3] [kN]	**Min. spacing** s_{min}[2] [mm]	**Min. edge distance** c_{min}[2] [mm]	**Permissible tensile load** N_{perm}[3] [kN]	**Permissible shear load** V_{perm}[3] [kN]	**Min. spacing** s_{min}[2] [mm]	**Min. edge distance** c_{min}[2] [mm]
FAZ II 8 GS A4	45	100	20,0	2,4	6,9	35	40	4,3	6,9	40	40
FAZ II 10 GS A4	60	120	45,0	4,3	11,4	40	45	7,6	11,4	40	45
FAZ II 12 GS A4	70	140	60,0	7,6	16,9	45	55	11,9	16,9	50	55
FAZ II 16 GS A4	85	170	110,0	13,4	31,4	60	65	18,8	31,4	60	65

1) The partial safety factors for material resistance as regulated in the approval as well as a partial safety factor for load actions of $\gamma_L = 1,4$ are considered. As an single anchor counts e.g. an anchor with a spacing $s \geq 3 \times h_{ef}$ and an edge distance $c \geq 1,5 \times h_{ef}$. Accurate data see approval.

2) Minimum possible axial spacings resp. edge distance while reducing the permissible load for the minimum member thickness ($h_{min} \geqq 2 \times h_{ef}$). The combination of the given min. spacing and min. edge distance is not possible. One of them has to be increased according approval.

3) For combination of tensile loads, shear loads, bending moments as well as reduced edge distances or spacings (anchor groups) see approval.

4) For higher concrete strength classes up to C50/60 higher permissible loads may be possible.

5) According approval the minimum member thickness ($h_{min} \geqq 2 \times h_{ef}$) can be reduced under specific conditions.

Bolt anchor FBN II

The cost-efficient fixing for flexible use in non-cracked concrete.

Column bases

Stormwater overflow tank manholes

VERSIONS

- zinc-plated steel
- stainless steel
- hot-dip galvanised steel

APPROVALS

ETA-07/0211
ETAG 001-2
Option 7 for non-cracked concrete

Fire resistance classification F 120

Rost frei

BUILDING MATERIALS

Approved for:

- Concrete C20/25 to C50/60, non-cracked

Also suitable for:

- Concrete C12/15
- Natural stone with dense structure

ADVANTAGES

- The standard anchorage depth achieves the maximum load-bearing capacities. Thus fewer fixing points and smaller anchor plates are required.
- The reduced anchorage depth reduces the drill hole depth. This minimises the amount of time needed for installation whilst increasing flexibility.
- The long thread balances component tolerances and allows for stand-off installations, thus increasing flexibility.
- Few hammer blows and the minimal torque slippage allow for a noticeably simpler installation.
- The drive-in pin protects the thread from damage, and thus ensures a faster installation and dismantling of the attachment.

APPLICATIONS

- Steel constructions
- Guard rails
- Consoles
- Ladders
- Cable conduits
- Machines
- Staircases
- Gates
- Façades

FUNCTIONING

- The FBN II is suitable for pre-positioned and push-through installation; also suitable for stand-off installation under certain conditions.
- Prior to installation, place the hexagon nut in the optimal position (the drive-in pin projects by approx. 3 mm out of the hexagon nut).
- When applying the torque, the cone bolt is pulled into the expansion clip and expands it against the drill hole wall.
- The head embossing offers a simple control of the anchoring.
- In the case of series installation, we recommend using the FABS bolt anchor setting tool.

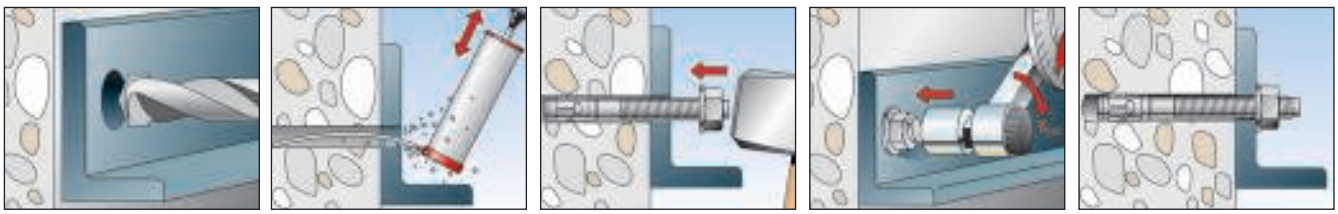

TECHNICAL DATA

Bolt anchor **FBN II**

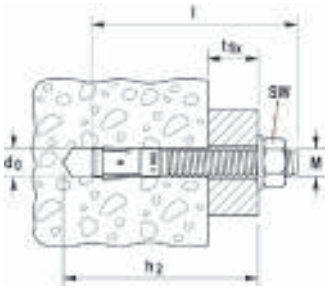

	zinc-plated steel	stainless steel	hot-dip galvanised steel	Approval	Drill hole diameter	Min. drill-hole depth for through fixings	Anchor length	Max. usable length hef,stand/ hef,red	Thread	Width across nut	Sales unit
	Art.-No.	Art.-No.	Art.-No.	ETA	d_0 [mm]	h_2 [mm]	l [mm]	t_{fix} [mm]	Ø x length [mm]	⬡ SW [mm]	[pcs]
Item	**gvz**	**A4**	**fvz**								
FBN II 6/5	**505526** 1) 2)	–	–	■	6	45	50	5/-	M 6 x 12	10	100
FBN II 6/10	**505527** 1) 2)	**505532** 1) 2)	–	■	6	50	55	10/ -	M 6 x 17	10	100
FBN II 6/30	**505528** 1) 2)	**505535** 1) 2)	–	■	6	70	75	30/-	M 6 x 35	10	100
FBN II 8/5	**040662**	–	–	■	8	61	66	5/15	M 8 x 34	13	50
FBN II 8/10	**040664**	**507555**	–	■	8	66	71	10/20	M 8 x 39	13	50
FBN II 8/10	–	–	**507575**	–	8	66	71	10/20	M 8 x 39	13	50
FBN II 8/20	**040669**	–	–	■	8	76	81	20/30	M 8 x 49	13	50
FBN II 8/30	**040700**	**507556**	–	■	8	86	91	30/40	M 8 x 59	13	50
FBN II 8/30	–	–	**507576**	–	8	86	91	30/40	M 8 x 59	13	50
FBN II 8/50	**040771**	**507557**	–	■	8	106	111	50/60	M 8 x 79	13	50
FBN II 8/50	–	–	**507577**	–	8	106	111	50/60	M 8 x 79	13	50
FBN II 8/70	**040777**	–	–	■	8	126	131	70/80	M 8 x 99	13	20
FBN II 8/70	–	–	**507578**	–	8	126	131	70/80	M 8 x 99	13	20
FBN II 8/100	**040783**	–	–	■	8	156	161	100/110	M 8 x 129	13	20
FBN II 10/10	**040827**	**507558**	–	■	10	78	86	10/20	M 10 x 46	17	50
FBN II 10/10	–	–	**507579**	–	10	78	86	10/20	M 10 x 46	17	50
FBN II 10/20	**040851**	**507559**	–	■	10	88	96	20/30	M 10 x 56	17	50
FBN II 10/30	**040854**	**507560**	–	■	10	98	106	30/40	M 10 x 66	17	50
FBN II 10/30	–	–	**507580**	–	10	98	106	30/40	M 10 x 66	17	50
FBN II 10/50	**040855**	**507561**	–	■	10	118	126	50/60	M 10 x 86	17	20
FBN II 10/50	–	–	**507582**	–	10	118	126	50/60	M 10 x 86	17	20
FBN II 10/70	**040931**	–	–	■	10	138	146	70/80	M 10 x 106	17	20
FBN II 10/100	**040943**	**507562**	–	■	10	168	176	100/110	M 10 x 136	17	20
FBN II 10/100	–	–	**507583**	–	10	168	176	100/110	M 10 x 136	17	20
FBN II 10/140	**040944**	–	–	■	10	208	216	140/150	M 10 x 176	17	20
FBN II 10/160	**040945**	–	–	■	10	228	236	160/170	M 10 x 196	17	20
FBN II 12/10	**040950**	**507563**	–	■	12	95	106	10/25	M 12 x 59	19	20
FBN II 12/10	–	–	**507589**	–	12	95	106	10/25	M 12 x 59	19	20
FBN II 12/20	**044558**	**507564**	–	■	12	105	116	20/35	M 12 x 69	19	20
FBN II 12/30	**045263**	**507565**	–	■	12	115	126	30/45	M 12 x 79	19	20
FBN II 12/30	–	–	**507591**	–	12	115	126	30/45	M 12 x 79	19	20
FBN II 12/50	**045264**	**507566**	–	■	12	135	146	50/65	M 12 x 99	19	20
FBN II 12/50	–	–	**507592**	–	12	135	146	50/65	M 12 x 99	19	20
FBN II 12/80	**045265**	–	–	■	12	165	176	80/95	M 12 x 129	19	20
FBN II 12/100	**045266**	**507567**	–	■	12	185	196	100/115	M 12 x 149	19	20
FBN II 12/100	–	–	**507596**	–	12	185	196	100/115	M 12 x 149	19	20
FBN II 12/120	**045267**	–	–	■	12	205	216	120/135	M 12 x 169	19	20
FBN II 12/140	**045268**	–	–	■	12	225	236	140/155	M 12 x 189	19	20
FBN II 12/160	**045269**	–	–	■	12	245	256	160/175	M 12 x 189	19	20
FBN II 16/10	–	**507568**	–	■	16	114	130	10/25	M 16 x 74	24	10
FBN II 16/25	**045564**	**507569**	–	■	16	129	145	25/40	M 16 x 89	24	10
FBN II 16/25	–	–	**507598**	–	16	129	145	25/40	M 16 x 89	24	10
FBN II 16/50	**045565**	**507570**	–	■	16	154	170	50/65	M 16 x 105	24	10

1) Use restricted to anchoring of structural components which are statically indeterminate.

2) Nut and washer not pre-assembled/supplied loose.

Bolt anchor FBN II

The cost-efficient fixing for flexible use in non-cracked concrete.

TECHNICAL DATA

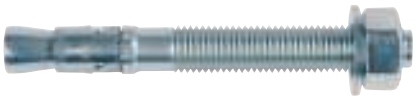

Bolt anchor **FBN II**

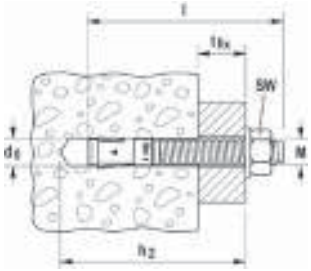

	zinc-plated steel	stainless steel	hot-dip galvanised steel	Approval	Drill hole diameter	Min. drill-hole depth for through fixings	Anchor length	Max. usable length hef,stand/ hef,red	Thread	Width across nut	Sales unit
	Art.-No.	Art.-No.	Art.-No.	ETA	d_0 [mm]	h_2 [mm]	l [mm]	t_{fix} [mm]	Ø x length [mm]	⬡ SW [mm]	[pcs]
Item	**gvz**	**A4**	**fvz**								
FBN II 16/50	–	–	507553	–	16	154	170	50/65	M 16 x 105	24	10
FBN II 16/80	045566	–	–	■	16	184	200	80/95	M 16 x 144	24	10
FBN II 16/100	045567	–	–	■	16	204	220	100/115	M 16 x 164	24	10
FBN II 16/100	–	–	507554	–	16	204	220	100/115	M 16 x 164	24	10
FBN II 16/140	045568	–	–	■	16	244	260	140/155	M 16 x 184	24	10
FBN II 16/160	045569	–	–	■	16	264	280	160/175	M 16 x 184	24	10
FBN II 16/200	045570	–	–	■	16	304	320	200/215	M 16 x 100	24	10
FBN II 20/30	045573	507571	–	■	20	165	187	30/55	M 20 x 90	30	10
FBN II 20/30	–	–	508015	–	20	165	187	30/55	M 20 x 90	30	50
FBN II 20/60	045574	507572	–	■	20	195	217	60/85	M 20 x 90	30	10
FBN II 20/80	045575	–	–	■	20	215	237	80/105	M 20 x 90	30	10
FBN II 20/120	045576	–	–	■	20	255	277	120/145	M 20 x 90	30	10

1) Use restricted to anchoring of structural components which are statically indeterminate.

2) Nut and washer not pre-assembled/supplied loose.

TECHNICAL DATA

Bolt anchor **FBN II K**

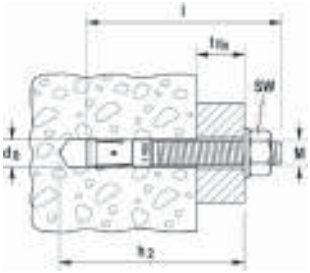

	zinc-plated steel, short version	stainless steel, short version	hot-dip galvanised steel, short version	Approval	Drill hole diameter	Min. drill-hole depth for through fixings	Anchor length	Max. usable length hef,stand/ hef,red	Thread	Width across nut	Sales unit
	Art.-No.	Art.-No.	Art.-No.	ETA	d_0 [mm]	h_2 [mm]	l [mm]	t_{fix} [mm]	Ø x length [mm]	⬡ SW [mm]	[pcs]
Item	**gvz**	**A4**	**fvz**								
FBN II 8/5 K	040806	508007	–	■	8	51	56	-/5	M 8 x 24	13	50
FBN II 8/5 K	–	–	508012	–	8	51	56	-/5	M 8 x 24	13	50
FBN II 8/10 K	040807	–	–	■	8	56	61	-/10	M 8 x 29	13	50
FBN II 10/5 K	040946	508010	–	■	10	63	71	-/5	M 10 x 31	17	50
FBN II 10/5 K	–	–	508013	–	10	63	71	-/5	M 10 x 31	17	50
FBN II 10/10 K	040947	–	–	■	10	68	76	-/10	M 10 x 36	17	50
FBN II 12/5 K	045272	508011	–	■	12	75	86	-/5	M 12 x 39	19	20
FBN II 12/5 K	–	–	508014	–	12	75	86	-/5	M 12 x 39	19	20
FBN II 12/10 K	045273	–	–	■	12	80	91	-/10	M 12 x 44	19	20
FBN II 12/30 K	045274	–	–	■	12	100	111	-/30	M 12 x 64	19	20
FBN II 16/15 K	045571	508745	–	■	16	104	120	-/15	M 16 x 64	24	10

TECHNICAL DATA

Bolt anchor **FBN II K**

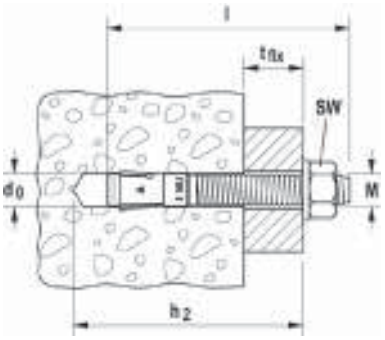

	zinc-plated steel, short version	stainless steel, short version	hot-dip galvanised steel, short version	Approval	Drill hole diameter	Min. drill-hole depth for through fixings	Anchor length	Max. usable length hef,stand/ hef,red	Thread	Width across nut	Sales unit
	Art.-No.	Art.-No.	Art.-No.	ETA	d_0 [mm]	h_2 [mm]	l [mm]	t_{fix} [mm]	Ø x length [mm]	⬡ SW [mm]	[pcs]
Item	**gvz**	**A4**	**fvz**								
FBN II 16/15 K	–	–	**507597**	–	16	104	120	-/15	M 16 x 64	24	10
FBN II 16/25 K	**045572**	–	–	■	16	114	130	-/25	M 16 x 74	24	10
FBN II 20/10 K	**045577**	–	–	■	20	120	142	-/10	M 20 x 50	30	10

ACCESSORIES

fischer Anchor bolt setting tool **FABS**

Item	Art.-No.	Fits anchor	Sales unit [pcs]
FABS	**077937**	FAZ II, FBN II, EXA for diameter from M6 - M12	1

LOADS

Bolt anchor FBN II

Highest permissible loads for a single anchor[1] in concrete C20/25[4]

For the design the complete approval ETA - 07/0211 has to be considered.

					Non-cracked concrete			
Type	**Min. effective anchorage depth $h_{ef,min}$ [mm]**	**Max. effective anchorage depth $h_{ef,max}$ [mm]**	**Min. member thickness h_{min} [mm]**	**Installation torque T_{inst} [Nm]**	**Permissible tensile load N_{perm}[3] [kN]**	**Permissible shear load V_{perm}[3] [kN]**	**Min. spacing s_{min}[2] [mm]**	**Min. edge distance c_{min}[2] [mm]**
FBN II 6[5]		30	100	4,0	2,9	2,7	50	100
FBN II 8[5]	30		100	15,0	2,9	4,0	40	40
		40	100	15,0	6,1	6,1	40	40
FBN II 10	40		100	30,0	6,1	6,1	50	80
		50	100	30,0	8,5	8,5	50	50
FBN II 12	50		100	50,0	8,5	8,5	70	100
		65	120	50,0	12,6	14,3	70	70
FBN II 16	65		120	100,0	12,6	25,2	90	120
		80	160	100,0	17,2	26,9	90	90
FBN II 20	80		160	200,0	17,2	34,4	120	120
		105	200	200,0	25,9	38,3	120	120

1) The partial safety factors for material resistance as regulated in the approval as well as a partial safety factor for load actions of γ_L = 1,4 are considered. As an single anchor counts e.g. an anchor with a spacing s ≥ 3 x h_{ef} and an edge distance c ≥ 1,5 x h_{ef}. Accurate data see approval.

2) Minimum possible axial spacings resp. edge distance while reducing the permissible load.

3) For combinations of tensile loads, shear loads, bending moments as well as reduced edge distances or spacings (anchor groups) see approval.

4) For higher concrete strength classes up to C50/60 higher permissible loads may be possible.

5) The anchorage depths smaller than 40 mm are only allowed for multiple use for non-structural applications.

Bolt anchor FBN II

The cost-efficient fixing for flexible use in non-cracked concrete.

LOADS

Bolt anchor FBN II A4

Highest permissible loads for a single anchor[1] in concrete C20/25[4]

For the design the complete approval ETA - 07/0211 has to be considered.

					Non-cracked concrete			
Type	**Min. effective anchorage depth $h_{ef,min}$ [mm]**	**Max. effective anchorage depth $h_{ef,max}$ [mm]**	**Min. member thickness h_{min} [mm]**	**Installation torque T_{inst} [Nm]**	**Permissible tensile load N_{perm}[3] [kN]**	**Permissible shear load V_{perm}[3] [kN]**	**Min. spacing s_{min}[2] [mm]**	**Min. edge distance c_{min}[2] [mm]**
FBN II 6 A4 [5]		30	100	4,0	2,9	3,0	50	100
FBN II 8 A4 [5]	30		100	10,0	2,9	4,0	50	45
		40	100	10,0	6,1	6,1	40	45
FBN II 10 A4	40		100	20,0	6,1	6,1	50	80
		50	100	20,0	8,5	8,5	70	55
FBN II 12 A4	50		100	35,0	8,5	8,5	70	100
		65	120	35,0	12,6	15,7	70	70
FBN II 16 A4	65		120	80,0	12,6	25,2	90	120
		80	160	80,0	17,2	29,1	120	80
FBN II 20 A4	80		160	150,0	17,2	34,4	140	120
		105	200	150,0	25,9	49,1	120	120

1) The partial safety factors for material resistance as regulated in the approval as well as a partial safety factor for load actions of $\gamma_L = 1,4$ are considered. As an single anchor counts e.g. an anchor with a spacing $s \geq 3 \times h_{ef}$ and an edge distance $c \geq 1,5 \times h_{ef}$. Accurate data see approval.

2) Minimum possible axial spacings resp. edge distance while reducing the permissible load.

3) For combinations of tensile loads, shear loads, bending moments as well as reduced edge distances or spacings (anchor groups) see approval.

4) For higher concrete strength classes up to C50/60 higher permissible loads may be possible.

5) The anchorage depths smaller than 40 mm are only allowed for multiple use for non-structural applications.

Bolt anchor FBN II GS

The cost-efficient fixing with large washer for flexible use in non-cracked concrete.

Footing beams

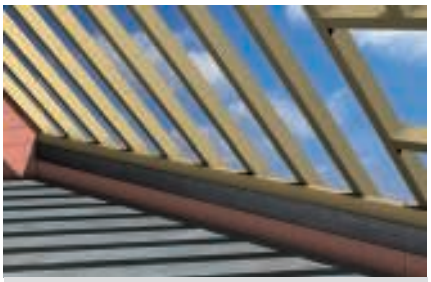

Anchoring of purlins

VERSIONS

- zinc-plated steel

BUILDING MATERIALS

Approved for:

- Concrete C20/25 to C50/60, non-cracked

Also suitable for:

- Concrete C12/15
- Natural stone with dense structure

APPROVALS

ETA CE
ETA-07/0211
ETAG 001-2
Option 7 for non-cracked concrete

Fire resistance classification F 120

ADVANTAGES

- The larger washer included with the FBN II GS creates a larger supporting surface and, as such, allows for the fixing of wood constructions.
- The pre-fitted washer ensures a fast installation.
- Furthermore, the FBN II GS bolt anchor offers all of the benefits of the FBN II – see page 195.

APPLICATIONS

- Wood constructions

FUNCTIONING

- The FBN II is suitable for pre-positioned and push-through installation; also suitable for stand-off installation under certain conditions.
- Prior to installation, place the hexagon nut in the optimal position (the drive-in pin projects by approx. 3 mm out of the hexagon nut).
- When applying the torque, the cone bolt is pulled into the expansion clip and expands it against the drill hole wall.
- The head embossing offers a simple control of the anchoring.
- In the case of series installation, we recommend using the FABS bolt anchor setting tool.

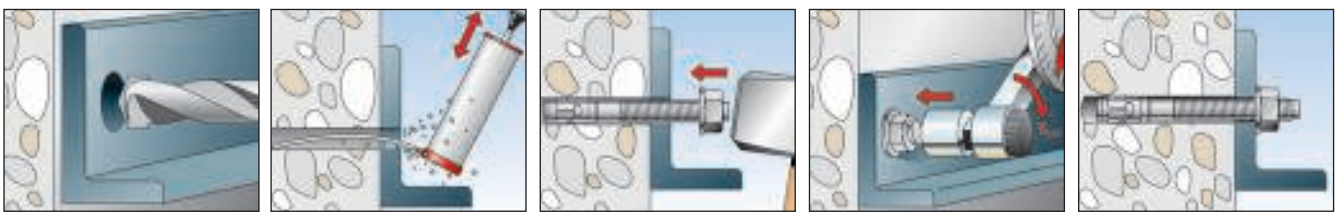

Bolt anchor FBN II GS

The cost-efficient fixing with large washer for flexible use in non-cracked concrete.

TECHNICAL DATA

Bolt anchor **FBN II-GS** with large washer

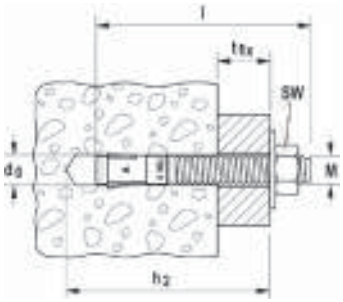

	steel, zinc-plated, with large washer	Approval	Drill hole diameter	Min. drill-hole depth for through fixings	Anchor length	Max. usable length hef,stand/ hef,red	Thread	Width across nut	Washer (outer diameter x thickness)	Sales unit
	Art.-No.	ETA	d_0 [mm]	h_2 [mm]	l [mm]	t_{fix} [mm]	Ø x length [mm]	⬡ SW [mm]	[mm]	[pcs]
Item	**gvz**									
FBN II 12/80 GS	**045578** 1)	■	12	165	176	80/95	M 12 x 129	19	44 x 2,5	20
FBN II 12/100 GS	**045579** 1)	■	12	185	196	100/115	M 12 x 149	19	44 x 2,5	20
FBN II 12/120 GS	**045580** 1)	■	12	205	216	120/135	M 12 x 169	19	44 x 2,5	20
FBN II 12/140 GS	**045581** 1)	■	12	225	236	140/155	M 12 x 189	19	44 x 2,5	10
FBN II 12/160 GS	**045583** 1)	■	12	245	256	160/175	M 12 x 189	19	44 x 2,5	10
FBN II 12/180 GS	**045584** 1)	■	12	265	276	180/195	M 12 x 189	19	44 x 2,5	10
FBN II 12/200 GS	**045585** 1)	■	12	285	296	200/215	M 12 x 189	19	44 x 2,5	10
FBN II 12/250 GS	**045586** 1)	■	12	335	346	250/265	M 12 x 100	19	44 x 2,5	10
FBN II 16/100 GS	**045588** 1)	■	16	204	220	100/115	M 16 x 164	24	56 x 3	10
FBN II 16/140 GS	**045590** 1)	■	16	244	260	140/155	M 16 x 184	24	56 x 3	10
FBN II 16/160 GS	**045591** 1)	■	16	264	280	160/175	M 16 x 184	24	56 x 3	10
FBN II 16/200 GS	**045593** 1)	■	16	304	320	200/215	M 16 x 100	24	56 x 3	10
FBN II 16/250 GS	**052192** 1)	■	16	354	370	250/265	M 16 x 100	24	56 x 3	10
FBN II 16/300 GS	**052204** 1)	■	16	404	420	300/315	M 16 x 100	24	56 x 3	10

1) GS = large washer

ACCESSORIES

fischer Anchor bolt setting tool **FABS**

Item	Art.-No.	Fits anchor	Sales unit [pcs]
FABS	**077937**	FAZ II, FBN II, EXA for diameter from M6 - M12	1

LOADS

Bolt anchor FBN II GS

Highest permissible loads for a single anchor1) in concrete C20/254)

For the design the complete approval ETA - 07/0211 has to be considered.

					Non-cracked concrete			
Type	**Min. effective anchorage depth $h_{ef,min}$ [mm]**	**Max. effective anchorage depth $h_{ef,max}$ [mm]**	**Min. member thickness h_{min} [mm]**	**Installation torque T_{inst} [Nm]**	**Permissible tensile load N_{perm}3) [kN]**	**Permissible shear load V_{perm}3) [kN]**	**Min. spacing s_{min}2) [mm]**	**Min. edge distance c_{min}2) [mm]**
FBN II 12 GS	50		100	50,0	8,5	8,5	70	100
		65	120	50,0	12,6	14,3	70	70
FBN II 16 GS	65		120	100,0	12,6	25,2	90	120
		80	160	100,0	17,2	26,9	90	90

1) The partial safety factors for material resistance as regulated in the approval as well as a partial safety factor for load actions of γ_L = 1,4 are considered. As an single anchor counts e.g. an anchor with a spacing s ≥ 3 x h_{ef} and an edge distance c ≥ 1,5 x h_{ef}. Accurate data see approval.

2) Minimum possible axial spacings resp. edge distance while reducing the permissible load.

3) For combinations of tensile loads, shear loads, bending moments as well as reduced edge distances or spacings (anchor groups) see approval.

4) For higher concrete strength classes up to C50/60 higher permissible loads may be possible.

5) The anchorage depths smaller than 40 mm are only allowed for multiple use for non-structural applications.

ZYKON hammerset anchor FZEA II

The internally threaded anchor with low anchoring depth for individual fixings in cracked concrete.

Emergency exit signs in tunnels

Air conditioning units

VERSIONS

- zinc-plated steel
- stainless steel
- highly corrosion-resistant steel

BUILDING MATERIALS

Approved for:

- Concrete C20/25 to C50/60, cracked and non-cracked

Also suitable for:

- Concrete C12/15
- Natural stone with dense structure

APPROVALS

ETA-06/0271
ETAG 001-3
Option 1 for cracked concrete

Fire resistance classification R 120

FM APPROVED from M10

M8 - M20

Rost frei

ADVANTAGES

- The combination of hammerset and ZYKON undercut anchor allows for individual fixings in cracked concrete.
- The special ZYKON undercut technology reduces the energy required for installation.
- The FZUB special drill allows for a fast installation by creating the undercut without having to change tools.
- The embossing that is applied when expanding the anchor secures the simple control of the anchoring.
- The almost expansion-free installation of the anchor allows small edge distances and axial spacing, thereby enabling flexible use.

APPLICATIONS

- Pipes
- Ventilation systems
- Sprinkler systems
- Cable conduits
- Suspended ceilings

FUNCTIONING

- The FZEA II is suitable for pre-positioned installation.
- The undercut drill hole is created using the special FZUB drill.
- Once the anchor has been placed in the drill hole, the expansion sleeve is expanded by the driving in of the internal expansion pin with the FZED Plus setting tool, and the undercut drill hole is filled with a positive fit.

ZYKON hammerset anchor FZEA II

The internally threaded anchor with low anchoring depth for individual fixings in cracked concrete.

TECHNICAL DATA

Zykon-Hammerset anchor **FZEA II**

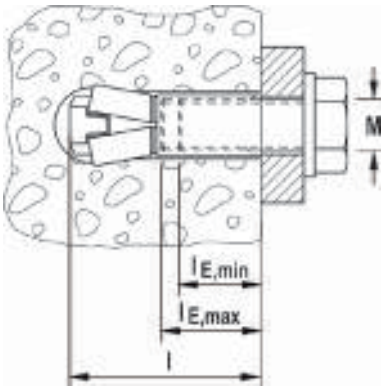

	zinc-plated steel Art.-No.	stainless steel Art.-No.	highly corrosion resistant steel Art.-No.	Approval ETA	Required drill bit FZUB	Required setting tool FZED plus	Length l [mm]	Internal thread M	Max. bolt penetration $l_{E,max}$ [mm]	Min. bolt penetration $l_{E,min}$ [mm]	Sales unit [pcs]
Item	gvz	A4	C								
FZEA II 10 x 40 M 8	**047303**	**047306**	**047309**	■	10 x 40	FZED 10 plus	43	M 8	17	11	100
FZEA II 12 x 40 M10	**047304**	**047307**	**047310**	■	12 x 40	FZED 12 plus	43	M 10	19	13	100
FZEA II 14 x 40 M12	**047305**	**047308**	**047311**	■	14 x 40	FZED 14 plus	43	M 12	21	15	50

ACCESSORIES

Drill bit **FZUB**

Item	Art.-No.	Fits anchor			Sales unit [pcs]
FZUB 10 x 40	**060622**	FZEA II 10 x 40			1
FZUB 12 x 40	**060623**	FZEA II 12 x 40			1
FZUB 14 x 40	**060624**	FZEA II 14 x 40			1

ACCESSORIES

Setting tool **FZED plus**

Item	Art.-No.	Fits anchor			Sales unit [pcs]
FZED 10 plus	**044642**	FZEA II 10 x 40			1
FZED 12 plus	**044643**	FZEA II 12 x 40			1
FZED 14 plus	**044644**	FZEA II 14 x 40			1

LOADS

ZYKON hammerset anchor FZEA II (screw quality 5.8)
Highest permissible loads for a single anchor[1] in concrete C20/25[4]
For the design the complete approval ETA - 06/0271 has to be considered.

				Cracked concrete				Non-cracked concrete			
Type	Effective anchorage depth h_{ef} [mm]	Min. member thickness h_{min} [mm]	Installation torque T_{inst} [Nm]	Permissible tensile load N_{perm}[3] [kN]	Permissible shear load V_{perm}[3] [kN]	Min. spacing s_{min}[2] [mm]	Min. edge distance c_{min}[2] [mm]	Permissible tensile load N_{perm}[3] [kN]	Permissible shear load V_{perm}[3] [kN]	Min. spacing s_{min}[2] [mm]	Min. edge distance c_{min}[2] [mm]
FZEA II 10 x 40 M8	40	80	10,0	1,6	4,7	40	40	3,6	4,7	40	40
FZEA II 12 x 40 M10	40	80	15,0	3,0	5,6	45	45	3,6	7,8	45	45
FZEA II 14 x 40 M12	40	80	20,0	3,6	5,6	50	50	3,6	7,9	50	50

1) The partial safety factors for material resistance as regulated in the approval as well as a partial safety factor for load actions of γ_L = 1,4 are considered. As an single anchor counts e.g. an anchor with a spacing $s \geq 3 \times h_{ef}$ and an edge distance $c \geq 1,5 \times h_{ef}$. Accurate data see approval.
2) Minimum possible axial spacings resp. edge distance while reducing the permissible load.
3) For combinations of tensile loads, shear loads, bending moments as well as reduced edge distances or spacings (anchor groups) see approval.
4) For higher concrete strength classes up to C50/60 higher permissible loads may be possible.

LOADS

ZYKON hammerset anchor FZEA II A4 (screw quality A4-70)
Highest permissible loads for a single anchor[1] in concrete C20/25[4]
For the design the complete approval ETA - 06/0271 has to be considered.

				Cracked concrete				Non-cracked concrete			
Type	Effective anchorage depth h_{ef} [mm]	Min. member thickness h_{min} [mm]	Installation torque T_{inst} [Nm]	Permissible tensile load N_{perm}[3] [kN]	Permissible shear load V_{perm}[3] [kN]	Min. spacing s_{min}[2] [mm]	Min. edge distance c_{min}[2] [mm]	Permissible tensile load N_{perm}[3] [kN]	Permissible shear load V_{perm}[3] [kN]	Min. spacing s_{min}[2] [mm]	Min. edge distance c_{min}[2] [mm]
FZEA II 10 x 40 M8 A4	40	80	15,0	1,6	5,6	40	40	3,6	5,7	40	40
FZEA II 12 x 40 M10 A4	40	80	20,0	3,0	5,6	45	45	3,6	7,9	45	45
FZEA II 14 x 40 M12 A4	40	80	40,0	3,6	5,6	50	50	3,6	7,9	50	50

1) The partial safety factors for material resistance as regulated in the approval as well as a partial safety factor for load actions of γ_L = 1,4 are considered. As an single anchor counts e.g. an anchor with a spacing $s \geq 3 \times h_{ef}$ and an edge distance $c \geq 1,5 \times h_{ef}$. Accurate data see approval.
2) Minimum possible axial spacings resp. edge distance while reducing the permissible load.
3) For combinations of tensile loads, shear loads, bending moments as well as reduced edge distances or spacings (anchor groups) see approval.
4) For higher concrete strength classes up to C50/60 higher permissible loads may be possible.

LOADS

ZYKON hammerset anchor FZEA II C (screw quality: material 1.4529, strength 700 N/mm²)
Highest permissible loads for a single anchor[1] in concrete C20/25[4]
For the design the complete approval ETA - 06/0271 has to be considered.

				Cracked concrete				Non-cracked concrete			
Type	Effective anchorage depth h_{ef} [mm]	Min. member thickness h_{min} [mm]	Installation torque T_{inst} [Nm]	Permissible tensile load N_{perm}[3] [kN]	Permissible shear load V_{perm}[3] [kN]	Min. spacing s_{min}[2] [mm]	Min. edge distance c_{min}[2] [mm]	Permissible tensile load N_{perm}[3] [kN]	Permissible shear load V_{perm}[3] [kN]	Min. spacing s_{min}[2] [mm]	Min. edge distance c_{min}[2] [mm]
FZEA II 10 x 40 M8 C	40	80	15,0	1,6	5,6	40	40	3,6	5,7	40	40
FZEA II 12 x 40 M10 C	40	80	20,0	3,0	5,6	45	45	3,6	7,9	45	45
FZEA II 14 x 40 M12 C	40	80	40,0	3,6	5,6	50	50	3,6	7,9	50	50

1) The partial safety factors for material resistance as regulated in the approval as well as a partial safety factor for load actions of γ_L = 1,4 are considered. As an single anchor counts e.g. an anchor with a spacing $s \geq 3 \times h_{ef}$ and an edge distance $c \geq 1,5 \times h_{ef}$. Accurate data see approval.
2) Minimum possible axial spacings resp. edge distance while reducing the permissible load.
3) For combinations of tensile loads, shear loads, bending moments as well as reduced edge distances or spacings (anchor groups) see approval.
4) For higher concrete strength classes up to C50/60 higher permissible loads may be possible.

Hammerset anchor EA II

The internally threaded anchor with rim for simple hammerset installation.

Sprinklers

Pipelines

VERSIONS

- zinc-plated steel
- stainless steel

BUILDING MATERIALS

Approved for:

- Concrete C20/25 to C50/60, cracked, for the multiple fixings of non-load-bearing systems
- Concrete C20/25 to C50/60, non-cracked

Also suitable for:

- Concrete C12/15
- Natural stone with dense structure

APPROVALS

ETA-07/0135
ETAG 001-4
Option 7 for non-cracked concrete

ETA-07/0142
ETAG 001-6
Multiple use for non-structural applications in concrete

Fire resistance classification R 120

FM APPROVED from M10

Rost frei

from M8

ADVANTAGES

- The embossed rim prevents the anchor sleeve from slipping, thus ensuring a trouble-free hammerset installation.
- The metric internal thread means that it is possible to use standard screws or threaded rods for the ideal adaptation to suit the intended use.
- The EA II S-SDS machine setting tool allows for effortless installation, particularly in the case of series installations.
- The embossing that is applied when expanding with the EAW H Plus setting tool offers a simple control of the anchoring and provides increased safety.

APPLICATIONS

- Pipelines and ventilation systems
- Sprinkler systems
- Cable conduits and wires
- Gratings
- Steel constructions
- Machines
- Consoles
- Shuttering props
- Diamond or core drilling devices (EA II M12 D)

FUNCTIONING

- The EA II is suitable for pre-positioned installation.
- Position the hammerset anchor in the drill hole and drive in flush to the surface of the anchor base using the hammer.
- The sleeve is then expanded by driving in the internal bolt with the EAW H Plus setting tool (alternative: EA II-SDS machine setting tool), and expanded against the drill hole wall.
- The setting tools must sit on the rim of the anchor to ensure correct expansion.
- Use the special EA II M12 D with thicker sleeve for fixing diamond and core drilling devices.

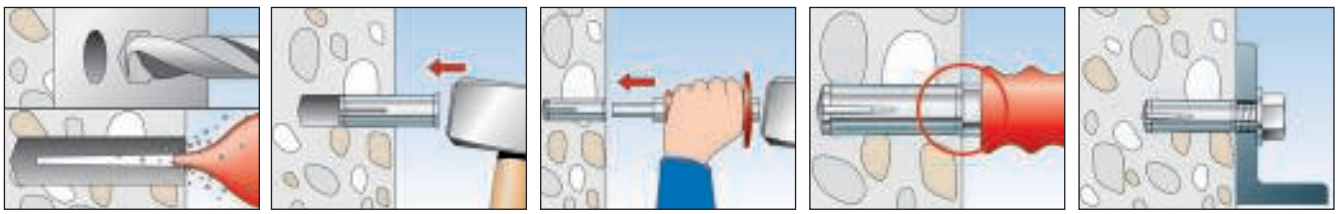

TECHNICAL DATA

Hammerset anchor **EA II. Not suitable for diamond drilling appliances and diamond saws.**

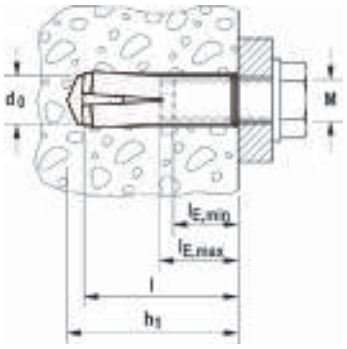

	zinc-plated steel	stainless steel	Approval	Drill hole diameter	Min. drill-hole depth for pre-positioned installation	Anchor length	Internal thread	Min. bolt penetration	Max. bolt penetration	Sales unit	
	Art.-No.	Art.-No.	ETA	d_0 [mm]	h_1 [mm]	l [mm]	M	$l_{E,min}$ [mm]	$l_{E,max}$ [mm]	[pcs]	
Item	**gvz**	**A4**									
EA II M 6	**048264**	**048410**	■	8	32	30	M 6	6	13	100	
EA II M 8	**048284**	**048411**	■	10	33	30	M 8	8	13	100	
EA II M 8 x 40	**048323**	**048412**	■	10	43	40	M 8	8	13	50	
EA II M 10 x 30	**048332**	–	■	12	33	30	M 10	10	13	50	
EA II M 10	**048339**	**048414**	■	12	43	40	M 10	10	17	50	
EA II M 12	**048406**	**048415**	■	15	54	50	M 12	12	22	25	
EA II M 16	**048408**	**048416**	■	20	70	65	M 16	16	28	20	
EA II M 20	**048409**	**048417**	■	25	85	80	M 20	20	34	10	

Associated setting tool for manual installation (EAW H plus), for installation with hammer drill (EA II-S-SDS)

TECHNICAL DATA

Hammerset anchor **EA-N D. Suitable for diamond drilling machines and diamond saws.**

Hammerset anchor **EA II M12 D. Suitable for diamond drilling appliances and diamond saws**

	zinc-plated steel	Approval	Drill hole diameter	Min. drill hole depth	Anchor length	Internal thread	Min. bolt penetration	Max. bolt penetration	Sales unit
	Art.-No.	ETA	d_0 [mm]	h_1 [mm]	l [mm]	M	$l_{E,min}$ [mm]	$l_{E,max}$ [mm]	[pcs]
Item	**gvz**								
EA M 12 N D	**500872**	–	16	50	50	M 12	12	22	50
EA II M 12 D	**048407**	■	16	54	50	M 12	12	22	25

Associated setting tool for manual installation (EAW H plus), for installation with hammer drill (EA II-S-SDS)

ACCESSORIES

Machine setting tool **EA II S-SDS**

Item	Art.-No.		Tool holder	Fits	Sales unit [pcs]
EA II S-SDS 6	**048065**		SDS plus	EA II M6	1
EA II S-SDS 8	**048066**		SDS plus	EA II M 8	1
EA II S-SDS 8 x 40	**048067**		SDS plus	EA II M 8 x 40	1
EA II S-SDS 10 x 30	**048068**	1)	SDS plus	EA II M 10 x 30	1
EA II S-SDS 10	**048070**		SDS plus	EA II M 10	1
EA II S-SDS 12	**048071**		SDS plus	EA II M 12 D / EA II M 12 / EA M 12 N D	1
EA II S-SDS-M 16	**048072**	1)	SDS max	EA II M 16	1
EA II S-SDS-M 20	**048073**	1)	SDS max	EA II M 20	1

1) Delivery time on request.

Hammerset anchor EA II

The internally threaded anchor with rim for simple hammerset installation.

ACCESSORIES

Setting tool **EAW H Plus** with hand impact protection for your safety and embossing tool.

Setting tool **EA-ST**

Item	Art.-No.		Fits	Sales unit [pcs]
EAW H 6 Plus	**044630**		EA II M6	1
EAW H 8 Plus	**044631**		EA II M 8	1
EAW H 8 x 40 Plus	**044632**		EA II M 8 x 40	1
EAW H 10 Plus	**044633**		EA II M 10	1
EAW H 10 x 30 plus	**048487**		EA II M 10 x 30	1
EAW H 12 Plus	**044634**		EA II M 12, EA II M 12 D	1
EAW H 16 Plus	**044635**		EA II M 16	1
EAW H 20 Plus	**044636**		EA II M 20	1
EA-ST 12	**504585**		EA II M6	1

LOADS

Hammerset anchor EA II (screw quality 5.8)

Highest permissible loads[1] for a single anchor for multiple use for non-structural applications in concrete C20/25 up to C50/60.
For the design the complete approval ETA - 07/0142 has to be considered.

				Cracked or Non-cracked concrete		
Type	**Effective anchorage depth h_{ef} [mm]**	**Min. member thickness h_{min} [mm]**	**Maximum torque moment $T_{inst,max}$ [Nm]**	**Permissible load F_{perm}[3] [kN]**	**Min. spacing s_{min}[2] [mm]**	**Min. edge distance c_{min}[2] [mm]**
EA II M6	30	100	4,0	1,0	65	115
EA II M8	30	100	8,0	1,7	95	140
EA II M8 x 40	40	100	8,0	1,7	95	140
EA II M10 x 30	30	120	15,0	1,7	85	140
EA II M10	40	120	15,0	2,5	95	160
EA II M12	50	120	35,0	3,6	145	200

1) The partial safety factors for material resistance as regulated in the approval as well as a partial safety factor for load actions of γ_L = 1,4 are considered.
2) Minimum possible axial spacings resp. edge distance while reducing the permissible load.
3) Valid for tensile load, shear load and oblique load under any angle. For combinations of tensile loads, shear loads, bending moments as well as reduced edge distances or spacings (anchor groups) see approval.

LOADS

Hammerset anchor EA II (screw quality 8.8)

Highest permissible loads for a single anchor[1] in concrete C20/25[4]
For the design the complete approval ETA - 07/0135 has to be considered.

				Non-cracked concrete			
Type	**Effective anchorage depth h_{ef} [mm]**	**Min. member thickness h_{min} [mm]**	**Maximum torque moment $T_{inst,max}$ [Nm]**	**Permissible tensile load N_{perm}[3] [kN]**	**Permissible shear load V_{perm}[3] [kN]**	**Min. spacing s_{min}[2] [mm]**	**Min. edge distance c_{min}[2] [mm]**
EA II M6[5]	30	100	4,0	4,0	3,9	65	115
EA II M8[5]	30	100	8,0	4,0	4,0	95	140
EA II M8 x 40	40	100	8,0	6,1	4,9	95	140
EA II M10 x 30[5]	30	120	15,0	4,0	4,0	85	140
EA II M10	40	120	15,0	6,1	6,1	95	160
EA II M12	50	120	35,0	8,5	8,5	145	200
EA II M12D	50	120	35,0	8,5	8,5	145	200
EA II M16	65	160	60,0	12,6	18,3	180	240
EA II M20	80	200	120,0	17,2	29,1	190	280

1) The partial safety factors for material resistance as regulated in the approval as well as a partial safety factor for load actions of γ_L = 1,4 are considered. As an single anchor counts e.g. an anchor with a spacing $s \geq 3 \times h_{ef}$ and an edge distance $c \geq 1,5 \times h_{ef}$. Accurate data see approval.
2) Minimum possible axial spacings resp. edge distance while reducing the permissible load.
3) For combinations of tensile loads, shear loads, bending moments as well as reduced edge distances or spacings (anchor groups) see approval.
4) For higher concrete strength classes up to C50/60 higher permissible loads may be possible.
5) Only for multiple use for non-structural applications.

Nail anchor FNA II

The installation-friendly hammerset anchor for multiple fixings.

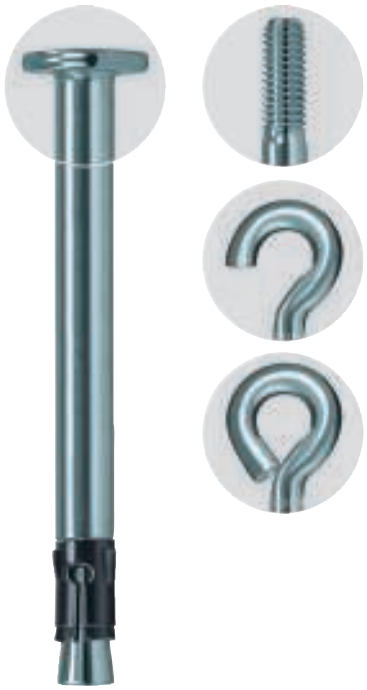

Suspended ceilings

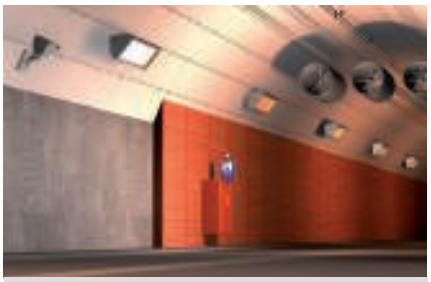

Fire protection boards

VERSIONS

- zinc-plated steel
- stainless steel
- highly corrosion-resistant steel

BUILDING MATERIALS

Approved for:

- Concrete C12/15 to C50/60, cracked, for multiple fixings of non-structural applications

Also suitable for:

- Solid sand-lime brick
- Natural stone with dense structure
- Prestressed hollow-core concrete slabs

APPROVALS

ETA-06/0175
ETAG 001-6
Multiple use for non-structural applications in concrete

Fire resistance classification R 120

RWS 1350 °C

ZTV 1200 °C

Rost frei

from M8

ADVANTAGES

- The special active principle allows for a simple hammerset installation and, therefore, a short processing time.
- The extremely short anchor depth prevents reinforcement hits, and creates the conditions for a trouble-free installation.
- The optimised expansion clip ensures hold when placing in the drill hole, and prevents it falling out during overhead installations.
- The massive shaft cross-section guarantees a high load-bearing capacity, thus offering an extremely high level of safety.
- A range of head shapes allows for the fixing of wide-ranging fixtures, and for the ideal adaptation to suit the intended use.

APPLICATIONS

- Fire protection plates
- Fire protection boards
- Ventilation systems
- Wire and nonious hangers
- Mounting rails
- Metal clamps
- Sub-structures made of wood or metal

FUNCTIONING

- The FNA II with nail head is suitable for push-through installation. The FNA II M6 is suitable for pre-positioned and push-through installation. The FNA II OE and H are suitable for pre-positioned installation.
- The installed FNA II nail anchor expands automatically under load. The cone is pulled into the expansion clip and expands it against the drill hole wall.
- Available setting tools:
  FNA S-SBO to slip onto the drill,
  FNA S-SDS for series installation with a drilling hammer,
  FNA S-H for the manual installation of mounting rails.

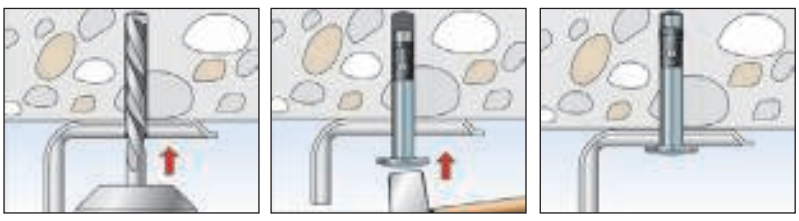

Nail anchor FNA II

The installation-friendly hammerset anchor for multiple fixings.

TECHNICAL DATA

Nail anchor **FNA II** with nail head

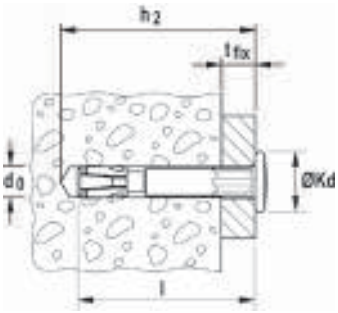

	zinc-plated steel	stainless steel	highly corrosion resistant steel	Approval	Drill hole diameter	Min. drill-hole depth for through fixings	Anchor length	Max. fixture thickness	KD head-Ø	Sales unit	
	Art.-No.	Art.-No.	Art.-No.	ETA	d_0 [mm]	h_2 [mm]	l [mm]	t_{fix} [mm]	[mm]	[pcs]	
Item	**gvz**	**A4**	**C**								
FNA II 6 x 25/5	**044121** 1)	–	–	■	6	40	35	5	13	100	
FNA II 6 x 30/5	**044115** 1)	**044122**	–	■	6	45	40	5	13	100	
FNA II 6 x 30/5	–	–	**044124**	■	6	45	40	5	13	25	
FNA II 6 x 30/20	–	–	**506147**	■	6	60	55	20	13	50	
FNA II 6 x 30/30	**044116**	**044123**	–	■	6	70	65	30	13	50	
FNA II 6 x 30/30	–	–	**044125**	■	6	70	65	30	13	25	
FNA II 6 x 30/50	**044117**	**046024**	**500569**	■	6	90	85	50	13	50	
FNA II 6 x 30/75	**044118**	–	**500573** 2)	■	6	115	110	75	13	50	
FNA II 6 x 30/100	**044119**	–	**500574** 2)	■	6	140	135	100	13	50	
FNA II 6 x 30/120	**044120**	–	**500575** 2)	■	6	160	155	120	13	50	

1) with hexagon below the nail head for anti-rotation lock of hole and wire hangers (for example) and centring for optional setting tool FNA-S

2) On request.

TECHNICAL DATA

Nail anchor **FNA II M6** with thread and flange nut

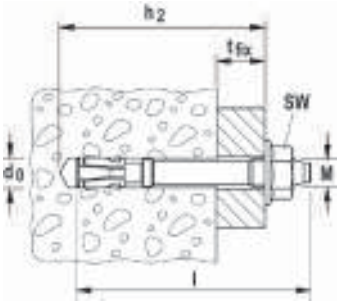

	zinc-plated steel	stainless steel	highly corrosion resistant steel	Approval	Drill hole diameter	Min. drill-hole depth for through fixings	Anchor length	Max. fixture thickness	Thread	Width across nut	Sales unit
	Art.-No.	Art.-No.	Art.-No.	ETA	d_0 [mm]	h_2 [mm]	l [mm]	t_{fix} [mm]	M	⬡ SW [mm]	[pcs]
Item	**gvz**	**A4**	**C**								
FNA II 6 x 25 M6/5	**044111**	–	–	■	6	40	45	5	M 6	10	100
FNA II 6 x 30 M6/5	**044109**	–	–	■	6	45	50	5	M 6	10	100
FNA II 6 x 30 M6/5	–	**044112** 2)	–	■	6	45	50	5	M 6	10	50
FNA II 6 x 30 M6/5	–	–	**044113** 2)	■	6	45	50	5	M 6	10	25
FNA II 6 x 30 M6 x 41	**044110** 1)	–	–	■	6	40	41	–	M 6	10	100
FNA II 6 x 30 M6/10	**046022**	–	–	■	6	45	55	10	M 6	10	100
FNA II 6 x 30 M8/5	**044114**	–	–	■	6	45	51	5	M 8	13	50

1) without nut; e.g. for fixing of pipe clamps

2) with nut and washer (no flange nut)

TECHNICAL DATA

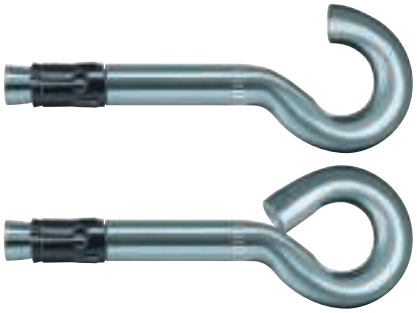

Nail anchor **FNA II-H** with hook

Nail anchor **FNA II-OE** with eye

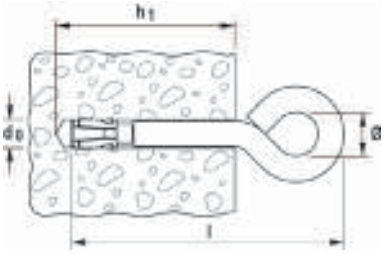

	zinc-plated steel	Approval	Drill hole diameter	Anchor length	Min. drill hole depth	Inner diameter of the hook/eye	Sales unit		
	Art.-No.	ETA	d_0 [mm]	l [mm]	h_1 [mm]	[Ø mm]	[pcs]		
Item	**gvz**								
FNA II 6 x 25 H	**044126**	–	6	54	35	10	50		
FNA II 6 x 25 OE	**044127**	■	6	54	35	10	50		

TECHNICAL DATA

Machine setting tool **FNA S-SDS**

Machine setting tool **FNA S-SBO** for mounting on the drill bit (drill-Ø 6mm)

Hand tool **FNA S-H**

Item	Art.-No.			Sales unit [pcs]
FNA S-SDS	**061547**	for all FNA II with nail head	The ideal setting tool for the serial installation with SDS-plus adapter for driving in FNA II with nail head using a hammer drill.	1
FNA S-SBO	**061548**	for all FNA II with nail head	For a power saving and fast installation to be placed on the drill.	1
FNA S-H	**095990**	for FNA II with metric thread M6	E.g. for the fixing of installation of mounting rails. Chuck with outer diameter of 15mm for the installation of FNA II M6 by hand.	1

Nail anchor FNA II

The installation-friendly hammerset anchor for multiple fixings.

LOADS

Nail anchor FNA II

Highest permissible loads[1] for a single anchor for multiple use for non-structural applications in concrete C20/25 up to C50/60[4]. For the design the complete approval ETA - 06/0175 has to be considered.

				Cracked or Non-cracked concrete		
Type	**Effective anchorage depth h_{ef} [mm]**	**Min. member thickness h_{min} [mm]**	**Maximum torque moment $T_{inst,max}$ [Nm]**	**Permissible load F_{perm}[3] [kN]**	**Min. spacing s_{min}[2] [mm]**	**Min. edge distance c_{min}[2] [mm]**
FNA II 6 x 25	25	80	-	1,4	100	50
FNA II 6 x 30	30	80	-	2,4	100	50
FNA II 6 x 25 M6	25	80	4,0	1,4	100	50
FNA II 6 x 30 M6	30	80	4,0	2,4	100	50
FNA II 6 x 30 M8	30	80	4,0	2,4	100	50
FNA II 6 x 25 OE	25	80	-	0,7	100	50

1) The partial safety factors for material resistance as regulated in the approval as well as a partial safety factor for load actions of γ_L = 1,4 are considered.
2) Minimum possible axial spacings resp. edge distance while reducing the permissible load. The combination of the given min. spacing and min. edge distance is not possible. One of them has to be increased according approval.
3) Valid for tensile load, shear load and oblique load under any angle. For combinations of tensile loads, shear loads, bending moments as well as reduced edge distances or spacings (anchor groups) see approval.
4) Loads for concrete strength class C12/15 see approval.

LOADS

Nail anchor FNA II A4

Highest permissible loads[1] for a single anchor for multiple use for non-structural applications in concrete C20/25 up to C50/60[4]. For the design the complete approval ETA - 06/0175 has to be considered.

				Cracked or Non-cracked concrete		
Type	**Effective anchorage depth h_{ef} [mm]**	**Min. member thickness h_{min} [mm]**	**Maximum torque moment $T_{inst,max}$ [Nm]**	**Permissible load F_{perm}[3] [kN]**	**Min. spacing s_{min}[2] [mm]**	**Min. edge distance c_{min}[2] [mm]**
FNA II 6 x 30 A4	30	80	-	2,4	100	50
FNA II 6 x 30 M6 A4	30	80	4,0	2,4	100	50

1) The partial safety factors for material resistance as regulated in the approval as well as a partial safety factor for load actions of γ_L = 1,4 are considered.
2) Minimum possible axial spacings resp. edge distance while reducing the permissible load. The combination of the given min. spacing and min. edge distance is not possible. One of them has to be increased according approval.
3) Valid for tensile load, shear load and oblique load under any angle. For combinations of tensile loads, shear loads, bending moments as well as reduced edge distances or spacings (anchor groups) see approval.
4) Loads for concrete strength class C12/15 see approval.

LOADS

Nail anchor FNA II C

Highest permissible loads[1] for a single anchor for multiple use for non-structural applications in concrete C20/25 up to C50/60[4]. For the design the complete approval ETA - 06/0175 has to be considered.

				Cracked or Non-cracked concrete		
Type	**Effective anchorage depth h_{ef} [mm]**	**Min. member thickness h_{min} [mm]**	**Maximum torque moment $T_{inst,max}$ [Nm]**	**Permissible load F_{perm}[3] [kN]**	**Min. spacing s_{min}[2] [mm]**	**Min. edge distance c_{min}[2] [mm]**
FNA II 6 x 30 C	30	80	-	2,4	100	50
FNA II 6 x 30 M6 C	30	80	4,0	2,4	100	50

1) The partial safety factors for material resistance as regulated in the approval as well as a partial safety factor for load actions of γ_L = 1,4 are considered.
2) Minimum possible axial spacings resp. edge distance while reducing the permissible load. The combination of the given min. spacing and min. edge distance is not possible. One of them has to be increased according approval.
3) Valid for tensile load, shear load and oblique load under any angle. For combinations of tensile loads, shear loads, bending moments as well as reduced edge distances or spacings (anchor groups) see approval.
4) Loads for concrete strength class C12/15 see approval.

Hollow-ceiling anchor FHY

The installation-friendly internally threaded anchor for fixings in pre-stressed hollow-core concrete slabs.

Air conditioning units in pre-stressed hollow-core concrete slabs

Cable trays in pre-stressed hollow-core concrete slabs

VERSIONS

- zinc-plated steel
- stainless steel

BUILDING MATERIALS

Approved for:

- Pre-stressed hollow-core concrete slabs ≥ C45/55

APPROVALS

ADVANTAGES

- The active principle of the anchor means that the FHY can be used in cavities or in solid materials up to 5 cm from the tensioning wire. This ensures the highest flexibility and user-friendly installation.
- The embossed edge prevents the anchor sleeve from slipping in the cavity, thus allowing for trouble-free installation.
- The optimised geometry minimises setting energy and allows for use in extremely narrow spaces. This allows for user-friendly installation.
- The metric internal thread means that it is possible to use standard screws or threaded rods for the ideal adaptation to suit the intended use.

APPLICATIONS

- Pipes
- Cable conduits
- Ventilation systems
- Sprinkler systems
- Suspended ceilings
- Consoles
- Steel constructions
- Wood constructions

FUNCTIONING

- The FHY is suitable for pre-positioned installation.
- Position the FHY hollow-ceiling anchor in the drill hole and drive in flush to the surface of the anchor base using the hammer.
- The FHY pre-positioned anchor must be able to be supported on the attachment for expansion.
- When applying the torque, the cone is pulled into the expansion sleeve and expands it into the cavity or expands it in the solid material against the drill hole wall.
- Screw length ls =
  Minimum screw-in depth e_2
  + Thickness of fixture t_{fix}
  + Thickness of washer
  (with threaded rod: + height of nut)

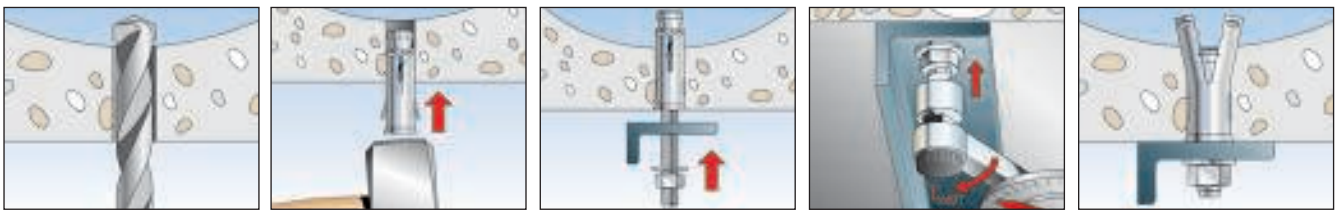

Hollow-ceiling anchor FHY

The installation-friendly internally threaded anchor for fixings in pre-stressed hollow-core concrete slabs.

TECHNICAL DATA

Hollow-ceiling anchor **FHY**, zinc-plated steel

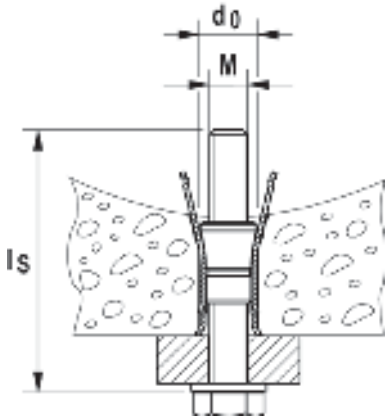

	zinc-plated steel	stainless steel	Approval	Drill hole diameter	Anchor length	Thread	Min. drill hole depth	Min. bolt penetration	Sales unit		
	Art.-No.	Art.-No.	DIBt	d_0 [mm]	l [mm]	M	h_1 [mm]	$l_{E,min}$ [mm]	[pcs]		
Item	**gvz**	**A4**									
FHY M 6	**030138**	–	●	10	37	M 6	50	37	50		
FHY M 6	–	**030139**	–	10	37	M 6	50	37	50		
FHY M 8	**030146**	–	●	12	43	M 8	60	43	25		
FHY M 8	–	**030147**	–	12	43	M 8	60	43	25		
FHY M10	**030148**	–	●	16	52	M 10	65	52	20		
FHY M10	–	**030151**	–	16	52	M 10	65	52	20		

LOADS

Hollow-ceiling anchor FHY (screw with grade 5.8)

Highest permissible loads[1] for a single anchor in pre-stressed hollow-core concrete slabs of strength class ≥ B55 resp. C45/55. For the design the complete approval Z-21.1-1711 has to be considered.

				Pre-stressed hollow-core concrete slabs		
Type	**Web thickness** d_u [mm]	**Min. anchorage depth** h_{ef} [mm]	**Torque moment** T_{inst} [Nm]	**Permissible load** F_{perm}[3] [kN]	**Min. spacing** s_{min}[2] [mm]	**Min. edge distance** c_{min}[2] [mm]
FHY M6	25 - 29	30	10,0	0,7	70	100
	30 - 39	30	10,0	0,9	80	100
	≥40	30	10,0	2,0	100	100
FHY M8	25 - 29	35	10,0	0,7	70	100
	30 - 39	35	10,0	0,9	80	100
	≥40	35	10,0	2,0	100	100
FHY M10	30 - 39	40	20,0	1,2	80	100
	≥40	40	20,0	3,0	100	100

1) The required safety factors as regulated in the approval are considered.
2) Minimum possible axial spacings resp. edge distance while reducing the permissible load.
3) Valid for tensile load, shear load and oblique load under any angle. For combinations of tensile loads, shear loads, bending moments as well as reduced edge distances or spacings (anchor groups) see approval.

LOADS

Hollow-ceiling anchor FHY A4 (screw with grade A4-70)

Highest recommended loads[1)] for a single anchor in pre-stressed hollow-core concrete slabs of strength class ≥ B55 resp. C45/55.

				Pre-stressed hollow-core concrete slabs		
Type	**Web thickness** d_u [mm]	**Min. anchorage depth** h_{ef} [mm]	**Torque moment** T_{inst} [Nm]	**Recommended load** F_{rec}[3)] [kN]	**Min. spacing** s_{min}[2)] [mm]	**Min. edge distance** c_{min}[2)] [mm]
FHY M6 A4	25 - 29	30	10,0	0,7	70	100
	30 - 39	30	10,0	0,9	80	100
	≥40	30	10,0	2,0	100	100
FHY M8 A4	25 - 29	35	10,0	0,7	70	100
	30 - 39	35	10,0	0,9	80	100
	≥40	35	10,0	2,0	100	100
FHY M10 A4	30 - 39	40	20,0	1,2	80	100
	≥40	40	20,0	3,0	100	100

1) Required safety factors are considered.
2) Minimum possible axial spacings resp. edge distance while reducing the recommended load.
3) Valid for tensile load, shear load and oblique load under any angle.

Concrete screw FBS

The fully removable fixing in cracked concrete.

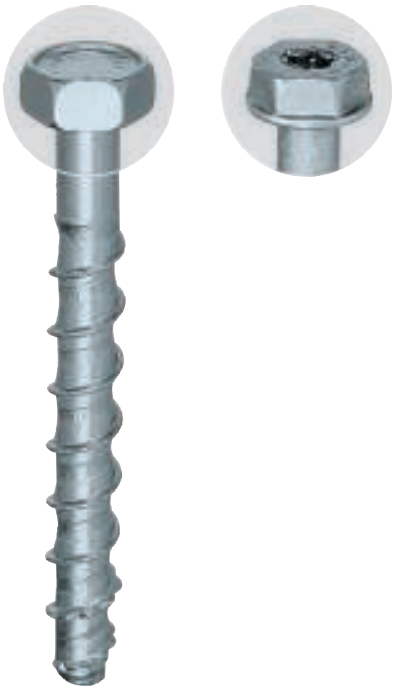

Formwork bracings

Protective barriers

VERSIONS

- zinc-plated steel
- stainless steel

BUILDING MATERIALS

Approved for:

- Concrete C20/25 to C50/60, cracked and non-cracked

Also suitable for:

- Concrete C12/15
- Natural stone with dense structure

APPROVALS

ETA-11/0095
ETAG 001-3

Option 1 for cracked concrete

Rost frei

ADVANTAGES

- The self-tapping concrete screw enables full removal and is ideally suited to temporary fixings.
- The FBS can be set and installed in one go, thereby saving on installation time.
- When combined with a tangential impact wrench, the screw principle allows for a quick and easy installation.
- The head embossing offers a simple control of the anchoring, thus saving time.

APPLICATIONS

- Guard rails
- Consoles
- Metal profiles
- Ladders
- Protection boards
- Gates
- Façades
- Window elements
- Temporary fixings

FUNCTIONING

- The FBS is suitable for push-through installation.
- When the concrete screw is screwed into the drill hole, the thread taps into the concrete with a positive fit.
- Please note the power output information to ensure that the best results are achieved with a tangential impact wrench (incl. nuts fitting tangential impact wrenches) (see table).
- Use FBS A4 for external applications (including temporary ones) and those in a damp environment.

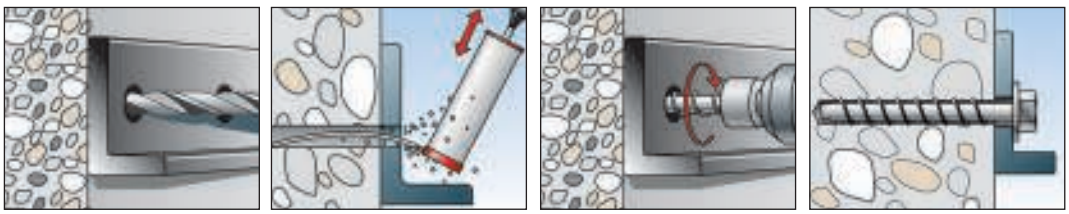

TECHNICAL DATA

Concrete screw **FBS-US** with hexagon head and forged washer

Concrete screw **FBS-S** with hexagon head

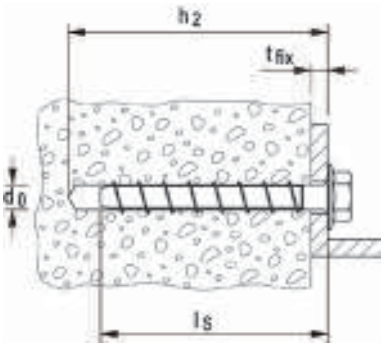

	zinc-plated steel	stainless steel	Approval	Drill hole diameter	Min. drill-hole depth for through fixings	Screw length	Max. fixture thickness	Actuation	Sales unit
	Art.-No.	Art.-No.	ETA	d_0 [mm]	h_2 [mm]	l_s [mm]	t_{fix} [mm]		[pcs]
Item	**gvz**	**A4**							
FBS 8/5 US	**066956**	–	■	8	90	80	5	T40/SW13	100
FBS 8/25 US	**066957**	–	■	8	110	100	25	T40/SW13	100
FBS 8/15 S	**066958**	–	■	8	100	90	15	SW 16	100
FBS 10/5 S	**067062**	–	■	10	100	90	5	SW 18	50
FBS 10/15 S	**067063**	–	■	10	110	100	15	SW 18	50
FBS 10/15 S	–	**047465**	–	10	110	100	15	SW 17	50
FBS 10/25 S	**067168**	–	■	10	120	110	25	SW 18	50

INSTALLATION OF CONCRETE SCREWS

Concrete screw	recommended nominal torque of the tangential impact wrench*) [Nm]	maximum tightening torque with torque wrench resp. ratch ≦ [Nm]
FBS 8	200	40
FBS 10	300	40

*) Use nuts (black) which fit percussion power screwdrivers!
The conversion of nominal output into effective tightening torque varies from machine to machine - always therefore use torque control.

LOADS

Concrete screw FBS
Highest permissible loads for a single anchor[1] in concrete C20/25[4]
For the design the complete approval ETA - 11/0095 has to be considered.

				Cracked concrete				Non-cracked concrete			
Type	**Effective anchorage depth** h_{ef} [mm]	**Min. member thickness** h_{min} [mm]	**Installation torque** T_{inst} [Nm]	**Permissible tensile load** N_{perm}[3] [kN]	**Permissible shear load** V_{perm}[3] [kN]	**Min. spacing** s_{min}[2] [mm]	**Min. edge distance** c_{min}[2] [mm]	**Permissible tensile load** N_{perm}[3] [kN]	**Permissible shear load** V_{perm}[3] [kN]	**Min. spacing** s_{min}[2] [mm]	**Min. edge distance** c_{min}[2] [mm]
FBS 8	51	120	-	4,3	6,2	50	50	5,7	8,6	50	50
FBS 10	68	130	-	7,6	16,2	70	70	13,5	16,2	70	70

1) The partial safety factors for material resistance as regulated in the approval as well as a partial safety factor for load actions of $\gamma_L = 1,4$ are considered. As an single anchor counts e.g. an anchor with a spacing $s \geq 3 \times h_{ef}$ and an edge distance $c \geq 1,5 \times h_{ef}$. Accurate data see approval.
2) Minimum possible axial spacings resp. edge distance while reducing the permissible load.
3) For combinations of tensile loads, shear loads, bending moments as well as reduced edge distances or spacings (anchor groups) see approval.
4) For higher concrete strength classes up to C50/60 higher permissible loads may be possible.

Concrete screw FBS

The fully removable fixing in cracked concrete.

LOADS

Concrete screw FBS A4

Highest permissible loads for a single anchor[1] in concrete C20/25[4]

For the design the complete approval ETA - 11/0095 has to be considered.

				Cracked concrete				Non-cracked concrete			
Type	**Effective anchorage depth** h_{ef} [mm]	**Min. member thickness** h_{min} [mm]	**Installation torque** T_{inst} [Nm]	**Permissible tensile load** N_{perm}[3] [kN]	**Permissible shear load** V_{perm}[3] [kN]	**Min. spacing** s_{min}[2] [mm]	**Min. edge distance** c_{min}[2] [mm]	**Permissible tensile load** N_{perm}[3] [kN]	**Permissible shear load** V_{perm}[3] [kN]	**Min. spacing** s_{min}[2] [mm]	**Min. edge distance** c_{min}[2] [mm]
FBS 10 A4	68	130	-	7,6	19,0	70	70	13,5	19,0	70	70

1) The partial safety factors for material resistance as regulated in the approval as well as a partial safety factor for load actions of $\gamma_L = 1,4$ are considered. As an single anchor counts e.g. an anchor with a spacing $s \geq 3 \times h_{ef}$ and an edge distance $c \geq 1,5 \times h_{ef}$. Accurate data see approval.

2) Minimum possible axial spacings resp. edge distance while reducing the permissible load.

3) For combinations of tensile loads, shear loads, bending moments as well as reduced edge distances or spacings (anchor groups) see approval.

4) For higher concrete strength classes up to C50/60 higher permissible loads may be possible.

Concrete screw FBS

The screw solution for multiple fixings.

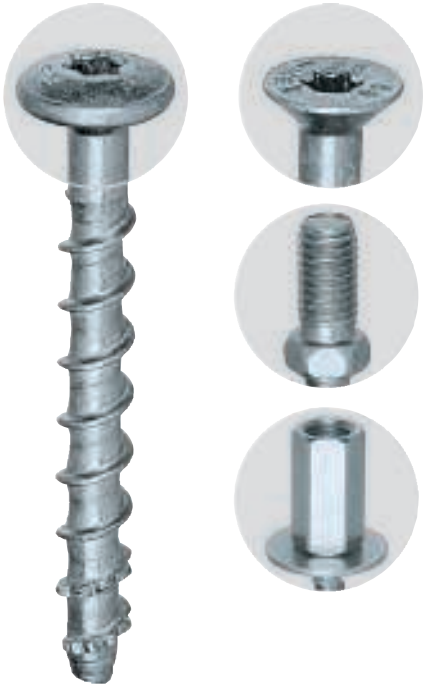

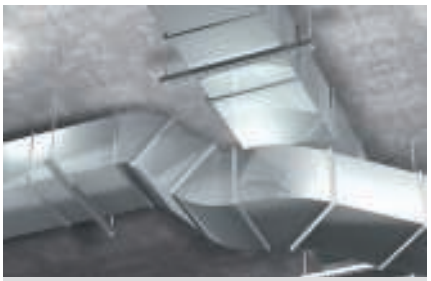

Ventilation systems

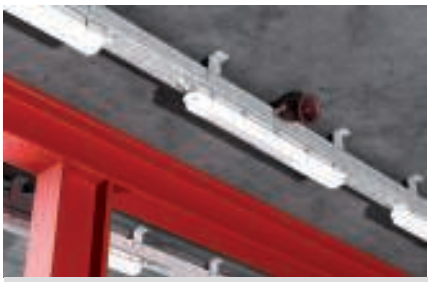

Strip lighting

VERSIONS

- zinc-plated steel

BUILDING MATERIALS

Approved for:

- Concrete C20/25 to C50/60, cracked, for multiple fixings of non-structural applications

Also suitable for:

- Concrete C12/15
- Natural stone with dense structure

APPROVALS

ADVANTAGES

- The concrete screw has been approved for the multiple fixing of non-load-bearing systems, and as such is ideal for fixing pipelines, cable conduits etc.
- The FBS can be set and installed in one go, thereby saving on installation time.
- When combined with a tangential impact wrench, the screw principle allows for a quick and easy installation.
- A range of head shapes allows for the fixing of wide-ranging attachments, and for the ideal adaptation to suit the intended use.

APPLICATIONS

- Pipes
- Ventilation systems
- Sprinkler systems
- Cable conduits
- Wire hangers
- Punched tapes
- Ceilings
- Temporary internal fixings

FUNCTIONING

- The FBS type SK and type P are suitable for push-through installation; whilst the FBS type M8 and type M8/M10 I are suitable for pre-positioned installation.
- When the concrete screw is screwed into the drill hole, the thread taps into the concrete with a positive fit.
- Please note the power output information to ensure that the best results are achieved with a tangential impact wrench (incl. nuts fitting tangential impact wrenches) (see table).
- Available head shapes for flexible design solutions:
  Countersunk head (type SK - for surface flush fixings), panhead (type P), bushing with internal thread (type M8/M10-I for suspensions), threaded bolts (type M8).

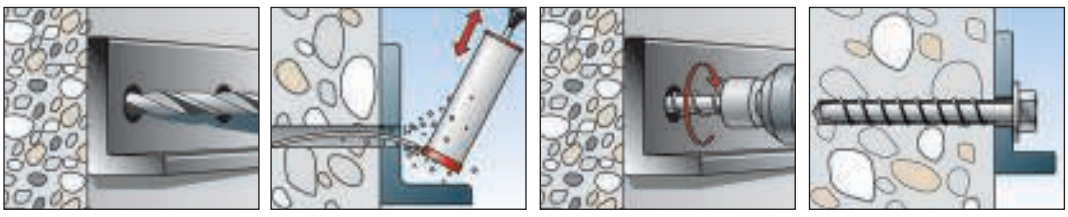

Concrete screw FBS

The screw solution for multiple fixings.

TECHNICAL DATA

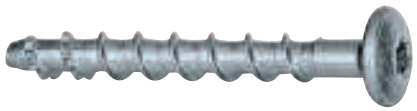

Concrete screw **FBS-P**, panhead

Concrete screw **FBS-SK**, countersunk head

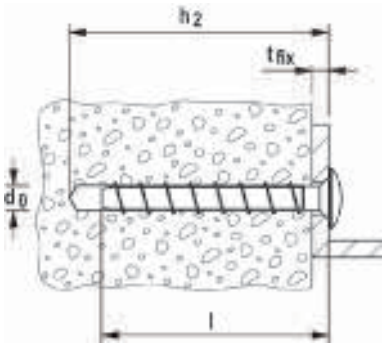

	zinc-plated steel Art.-No.	Approval ETA	Drill hole diameter d_0 [mm]	Min. drill-hole depth for through fixings h_2 [mm]	Anchor length l [mm]	Max. fixture thickness t_{fix} [mm]	Width across nut 	Sales unit [pcs]	
Item	**gvz**								
FBS 6/5 P	**066939**	■	6	–	–	5	–	–	
FBS 6/25 P	**066948**	■	6	85	80	25	T 30	100	
FBS 6/5 SK	**066935**	■	6	65	80	5	T 30	100	

TECHNICAL DATA

Concrete screw **FBS-M8**, outside diameter M8

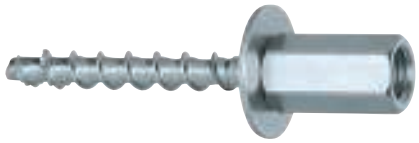

Concrete screw **FBS-M8/M10**, internal thread M8/M10

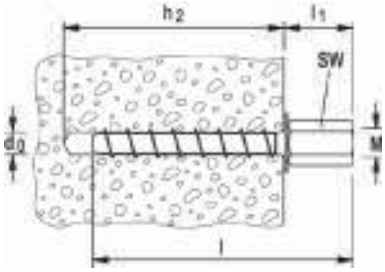

	zinc-plated steel Art.-No.	Approval ETA	Drill hole diameter d_0 [mm]	Min. drill-hole depth for through fixings h_2 [mm]	Anchor length l [mm]	Projection length l_1 [mm]	Thread M	Width across nut ⬡ SW [mm]	Sales unit [pcs]
Item	**gvz**								
FBS 6 M8	**066949**	■	6	60	75	19	M 8	10	100
FBS 6 M8/M10I	**066950**	■	6	60	83	26	M8 + M10	13	100

INSTALLATION OF CONCRETE SCREWS

Concrete screw	recommended nominal torque of the tangential impact wrench*) [Nm]	maximum tightening torque with torque wrench resp. ratch ≦ [Nm]
FBS 6	150	15

*) Use nuts (black) which fit percussion power screwdrivers!
The conversion of nominal output into effective tightening torque varies from machine to machine - always therefore use torque control.

fischer innovative solutions

LOADS

Concrete screw FBS

Highest permissible loads for a single anchor[1] for multiple use for non-structural applications in concrete C20/25[4].
For the design the complete approval ETA - 11/0093 has to be considered.

				Cracked concrete				Non-cracked concrete			
Typ	**Effective anchorage depth** h_{ef} [mm]	**Minimum member thickness** h_{min} [mm]	**Installation torque** T_{inst} [Nm]	**Permissible tensile load** N_{perm}[3] [kN]	**Permissible shear load** V_{perm}[3] [kN]	**Min. spacing** s_{min}[2] [mm]	**Min. edge distance** c_{min}[2] [mm]	**Permissible tensile load** N_{perm}[3] [kN]	**Permissible shear load** V_{perm}[3] [kN]	**Min. spacing** s_{min}[2] [mm]	**Min. edge distance** c_{min}[2] [mm]
FBS 6	44	100	-	3,6	3,3	40	40	3,6	3,3	40	40

1) The partial safety factors for material resistance as regulated in the approval as well as a partial safety factor for load actions of $\gamma_L = 1,4$ are considered. As an single anchor counts e.g. an anchor with a spacing $s \geq 3 \times h_{ef}$ and an edge distance $c \geq 1,5 \times h_{ef}$. Accurate data see approval.
2) Minimum possible axial spacings resp. edge distance while reducing the permissible load.
3) For combinations of tensile loads, shear loads, bending moments as well as reduced edge distances or spacings (anchor groups) see approval.
4) For higher concrete strength classes up to C50/60 higher permissible loads may be possible.

Chemical fixings

The complete fischer range of chemical fixings for every need, is listed in the page aside.
All information and characteristics are described in the fischer fixing catalogue (see on page 6).

Main applications with Installation Systems are done with:

- FIS VS 300 T (for silicon dispenser)
- FIS VT 380 C
- FIS P 300 T (for silicon dispenser)
- FIS P 380 C

Foams, sealants, adhesive and accessories:

- PUP B3
- PU 1/500 and PU 1/750
- PU 2/402 and PU 2/403
- PUP K2, PUP M3 and PUP M4 BLACK
- PUR 150 and PUR 500
- DSSA
- DSSI
- KD
- KP M1 and KP M2

fischer Injection systems – Overview and application

Injection system	Kind of mortar	Profi Shuttle cartridge	Semi professional cartridge	Standard cartridge	Masonry	Concrete	Reinforcement	VBS FWS Renovation system	Content	Scale unit on cartridge
FIS V	Vinyl ester Hybrid	✔			●	●	●	●	145 ml 360 ml 950 ml	70 180 500
FIS VW *HIGH SPEED*	Vinyl ester Hybrid	✔			●	●	○	○	360 ml	180
FIS VT 380 C	Vinyl ester		✔		○	●	○	○	380 ml	190
FIS VS *LOW SPEED*	Vinyl ester Hybrid			✔	●	●	○	○	100 ml 145 ml 300 ml	50 70 150
FIS EM 390 S	Epoxy resin	✔				○	○		390 ml 585 ml 1100 ml	180 275 560
FIS P 300 T	Polyester			✔	○				300 ml	150
FIS P 380 C	Polyester		✔		○				380 ml	190

● = approved for ○ = suitable for

INFORMATION

FIS = fischer Injection System

FIS V
= Vinyl ester hybrid

FIS VW
= Vinyl ester hybrid winter version (reduced curing time)

FIS VS
= Vinyl ester hybrid summer version (extended curing time)

FIS EM
= Epoxy resin

FIS VT
= Vinyl ester semi hybrid

FIS P
= Polyester for secondary application in masonry

Profi-shuttle-cartridge

For building professionals, requires little energy. Special dispenser required (manual, battery-driven or pneumatic).

Semi professional coaxial cartridge

For application with FIS AC special dispenser.

Standard-cartridge

For processing with stable standard dispensers for sealants. No special accessories required.

What is hybrid mortar?
This is a combination of normal organic components and a mineral additive.
Hybrid systems combine the advantages of organic and mineral mortar. This improves properties such as temperature and chemical resistance and load level.

One-component gun foam PUP B3

The gun foam with the perfect dosage.

Window connection joints

Connection joints around shutter boxes

BUILDING MATERIALS

Bonds to all standard building materials such as:

- Concrete
- Anodised layer
- Gypsum plasterboard
- Wood
- Sand-lime brick
- Plastics (not on PE, PP, Teflon, silicone)
- Masonry
- Metals with priming coat
- Plaster

CERTIFICATES

- Proven joint soundproofing R(ST,w)=60 dB in line with ISO EN 717-1

ADVANTAGES

- The low level of foam expansion during the curing period avoids reworking, thus guaranteeing a simple and time-saving application.
- The easy dosage allows for a controlled filling and sealing, and ensures that the correct amount is used.
- The proven 60dB sound insulation fulfils the standards of modern sound insulation and helps to reduce noise.
- The perfect-fit connection between the can and the gun means that work can be interrupted for as long as you like, and thus guarantees long-lasting functionality.

APPLICATIONS

- Insulating and filling in roofing work and dry construction
- Insulating and filling window connection joints, around window sills and shutter boxes
- Insulating and filling finished elements, wall connections, wall penetrations and cavities
- Insulating and filling pipe penetrations and ventilation ducts

FUNCTIONING

- 1-component PU foam
- Building material class B3
- Beige in colour
- Foam yield of extruded foam 41 l
- Processing temperature +10°C to +30°C
- Non-tacky after approx. 15 minutes
- Can be cut after approx. 45 minutes
- Cures within 5 to 8 hours
- Temperature resistant from -40°C to +90°C
- Layer thicknesses > 50 mm: foam in several layers and then dampen.
- Fresh foam stains can be removed immediately with fischer PU cleaner.

TECHNICAL DATA

Item	Art.-No.	Contents per canister [ml]	Max. foam yield (free foaming) [l]	Sales unit [pcs]				
PUP 750 B3 (GB)	058501	750	41	12				

One-component rapid installation foam PU1

The high-quality installation foam with reusable fix adapter system.

Window connection joints

Sealing concrete manhole rings

BUILDING MATERIALS

Bonds to all standard building materials such as:

- Concrete
- Anodised layer
- Gypsum plasterboard
- Wood
- Sand-lime brick
- Plastics (not on PE, PP, Teflon, silicone)
- Masonry
- Metals with priming coat
- Plaster

CERTIFICATES

- General test certificate from building authorities P-NDS04-136 for B2
- Proven joint soundproofing for B2: R(ST,w)=61 dB in line with ISO EN 717-1 for B2
- Test for watertightness for the adhesion of manhole rings

ADVANTAGES

- The reclosable fix adapter allows for immediate use and for the reuse of opened cans, thus guaranteeing long-lasting functionality.
- The rapid installation foam has been approved as watertight by an external inspection and is thus suitable for use in wet conditions. It fulfils the requirements of a well foam.
- The ergonomic handle sits perfectly in the hand and allows for easy use.

APPLICATIONS

- Bonding and sealing manhole rings
- Insulating and filling in roofing work and dry construction
- Insulating and filling window connection joints, around window sills and shutter boxes
- Insulating and filling finished elements, wall connections and wall penetrations

FUNCTIONING

- 1-component PU foam
- Building material class B2 or B3
- Beige in colour
- Solid valve prevents adhesion when being stored horizontally
- Foam yield of extruded foam 750 ml: 45 l (500 ml: 30 l)
- Processing temperature +5°C to +35°C
- Non-tacky after approx. 20 minutes
- Can be cut after approx. 40 minutes
- Cures within 5 to 8 hours
- Temperature resistant from -40°C to +90°C
- Layer thicknesses > 50 mm: foam in several layers and then dampen.
- Fresh foam stains can be removed immediately with fischer PU cleaner.

TECHNICAL DATA

Item	Art.-No.	Contents per canister [ml]	Max. foam yield (free foaming) [l]	Sales unit [pcs]				
PU 1/500 B2	050426	500	30	12				
PU 1/500 B3 (GB/E/F)	058500	500	28	12				
PU 1/500 B3 (DK/SE/NO/FI)	016260	500	28	12				
PU 1/750 B2	053080	750	45	12				
PU 1/750 B3 (GB/E)	050427	750	41	12				
PU 1/750 B3 (DK/SE/NO/FI)	016396	750	41	12				

2-component rapid foam PU2

The high-quality 2-component rapid foam for secure fixing with pull activation.

Foaming door frames

Foaming below bath tubs

BUILDING MATERIALS

Bonds to all standard building materials such as:

- Concrete
- Anodised layer
- Gypsum plasterboard
- Wood
- Sand-lime brick
- Plastics (not on PE, PP, Teflon, silicone)
- Masonry
- Metals with priming coat
- Plaster

CERTIFICATES

- General test certificate from building authorities P-NDS04-666

ADVANTAGES

- The humidity-independent system guarantees a controlled foaming, thus ensuring a safe and fast curing without repressing.
- The pull mechanism allows for a simple, safe activation of the components.
- The extremely uniform and fine-pore foam structure provides high strength values and offers a maximum of functionality.
- The high foam yield allows for the setting of up to 3 door frames. Thus the foam is particularly economical.
- The high resistance to rotting and ageing ensures consistent quality and guarantees a long-lasting fixing.

APPLICATIONS

- Installation of door frames (install expanders)
- Filling and insulating of cavities in walls and ceilings
- Foaming in windows, bath tubs and showers
- Fixing insulating elements, wooden cladding, sheet metal panels, control boxes

FUNCTIONING

- 2-component PU foam
- Building material class B2
- Light blue in colour
- Solid valve minimises premature loss of gas
- Foam yield of extruded foam 13 l
- Processing temperature +15°C to +25°C
- Non-tacky after approx. 6 minutes
- Can be cut after approx. 10 minutes
- Cures after approx. 30 minutes
- Temperature resistant from -40°C to +90°C
- Fresh foam stains can be removed immediately with fischer PU cleaner.

TECHNICAL DATA

Item	Art.-No.	Contents per canister [ml]	Max. foam yield (free foaming) [l]	Sales unit [pcs]				
PU 2/402 (D)	053081	400	13	12				

2-component fixing foam

The 2-component fixing foam for secure fixing with rotation activation.

Foaming door frames

Foaming below bath tubs

BUILDING MATERIALS

Bonds to all standard building materials such as:

- Concrete
- Anodised layer
- Gypsum plasterboard
- Wood
- Sand-lime brick
- Plastics (not on PE, PP, Teflon, silicone)
- Masonry
- Metals with priming coat
- Plaster

CERTIFICATES

- General test certificate from building authorities P-NDS04-666

ADVANTAGES

- The humidity-independent system guarantees a controlled foaming, thus ensuring a safe and fast curing.
- The ideal foam yield allows for the setting of up to 3 door frames. Thus the foam is particularly economical.
- The high resistance to rotting and ageing ensures consistent quality and guarantees a long-lasting fixing.

APPLICATIONS

- Installation of door frames (install expanders)
- Filling and insulating of cavities in walls and ceilings
- Foaming in windows, bath tubs and showers
- Fixing insulating elements, wooden cladding, sheet metal panels, control boxes

FUNCTIONING

- 2-component PU foam
- Building material class B2
- Light green in colour
- Activation via rotary disc on the bottom of the can
- Foam yield of extruded foam 11 l (sufficient for up to 3 door frames)
- Processing temperature +10°C to +25°C
- Non-tacky after 7 to 9 minutes
- Can be cut after 9 to 11 minutes
- Cures after approx. 30 minutes
- Temperature resistant from -40°C to +80°C
- Fresh foam stains can be removed immediately with fischer PU cleaner.

TECHNICAL DATA

Item	Art.-No.	Contents per canister [ml]	Max. foam yield (free foaming) [l]	Sales unit [pcs]				
PU 2/403 (D)	053089	400	11	12				

Accessories

PUP K2

ADVANTAGES

- The light construction facilitates use on construction sites and allows for fatigue-free work.
- The impact-requiring control prevents the unintentional unscrewing of the regulating screw, and is therefore particularly user-friendly.
- The gun adapter is suitable for all standard systems and enables universal application.
- Opened cans can remain screwed onto the gun during interruptions of work without curing.

PUP M3

ADVANTAGES

- The PUP M3 meets the tough requirements of a construction site and thus offers a long lifespan.
- The ergonomic handle allows for an ideal position of centre of gravity, and therefore precise handling.
- The infinitely variable control of the foam expulsion allows for a controlled filling and insulating, and enables application-orientated work.
- Opened cans can remain screwed onto the gun during interruptions of work without curing.

PUP M4 BLACK

ADVANTAGES

- The complete PTFE coating reduces cleaning to a minimum.
- Non-return ball and basket are coated with PTFE. This prevents bonding and guarantees a long-lasting function.
- The perfect combination of the ergonomically shaped handle and trigger makes handling particularly user-friendly.
- The tubes included with the 19 cm long, tapered pistol pipe mean that it can be individually lengthened for use in the narrowest joints, thus offering a high degree of flexibility.

TECHNICAL DATA

Item	Art.-No.	Sales unit [pcs]						
PUP K2	062400	1						
PUP M3	033208	1						
PUP M2	019522	1						
PUP M4 BLACK	513429	1						

Accessories

PU-cleaner

ADVANTAGES

- The active components ensure a high cleaning effect, making the cleaner ideal for the safe removal of fresh PU foam.
- The gun adapter is suitable for all standard systems and enables universal application.
- The separate spray head allows for the cleaning of external surfaces, making the product extremely versatile.
- The highly active cleaner can etch sensitive surfaces (paint, dye, textiles, plastics). Thus you should always conduct preliminary tests.

TECHNICAL DATA

Item	Art.-No.	Contents [ml]	Sales unit [pcs]					
PUR 150 (D)	053083	150	12					
PUR 500 (D/GB)	053085	500	12					

Premium sanitary silicone DSSA

The high-quality premium sanitary silicone.

Joints in sanitary areas

Sealings in the kitchen

BUILDING MATERIALS

- Chrome
- Stainless steel
- Anodised layer
- Enamel
- Epoxy
- Tiles
- Glass
- Glazed surfaces
- Wood (with primer)
- H-PVC
- Ceramics
- Polyester
- Sanitary acrylic

ADVANTAGES

- The high-quality formulation allows for easy application and smoothing, and ensures efficient work.
- The 25% elasticity means that DSSA is ideal for high-stress expansion joints. This guarantees long-lasting jointing.
- The very good hold on smooth surfaces prevents damp from forming in the substrate and guarantees reliable functioning.
- The high wear resistance gives the surface a high level of protection when cleaning. Together with the fungicidal properties, an ideal jointing can be achieved that will last over the long term.

APPLICATIONS

- Corner, movement and connection joints in sanitary areas (sinks, showers, bath tubs, expansion joints between tiles etc.)
- Connection joints in the kitchen
- Window and glass sealings
- Seal welds for display cabinets and glass blocks
- Small-scale adhesions (e.g. window bars)

FUNCTIONING

- Chemical base: 1-component silicone acetate
- Permanently elastic
- With fungicide
- Skin formation time: approx. 6 minutes
- Processing temperature: +5°C to +35°C
- Temperature resistance: -50°C to +200°C
- Permitted overall deformation: 25%
- Good chemical resistance
- Very good resistance to weather, ageing and UV
- Compatible with paint
- Not paintable
- Free of MDI and solvents
- Selection table for substrates – see main catalogue

TECHNICAL DATA

Item	Art.-No.	Colour	Contents [ml]	Sales unit [pcs]				
DSSA TP (D/GB)	053100	transparent	310	12				
DSSA W (D/GB)	053101	white	310	12				
DSSA GR (D/GB)	053102	grey	310	12				
DSSA BG (D/GB)	053103	bahama beige	310	12				
DSSA DG (D/GB)	053105	dark grey	310	12				
DSSA SW (D/GB)	053120	black	310	12				
DSSA SG (D/GB)	058530	silver grey	310	12				
DSSA FUG (D/GB)	512208	joint grey	310	12				
DSSA SAG (D/GB)	512209	sanitary grey	310	12				
DSSA MA (D/GB)	512210	manhattan	310	12				
DSSA AN (D/GB)	512211	anthracite	310	12				

Sanitary silicone DSSI

The standard sanitary silicone.

Joints in sanitary areas

Wash basins

BUILDING MATERIALS

- Stainless steel
- Anodised layer
- Epoxy
- Tiles
- Glazed surfaces
- Glass
- H-PVC
- Ceramics
- Painted wood
- Polyester

ADVANTAGES

- The 25% elasticity means that DSSI is ideal for expansion and connection joints. This guarantees long-lasting jointing.
- The very good hold on smooth surfaces, e.g. tiles, prevents damp forming in the substrate and guarantees reliable functioning.
- The fungicidal properties ensure a clean look over the long term.

APPLICATIONS

- Joints in sinks and toilets
- Expansion joints between floor and wall tiles
- Joints around enamel and plastic showers and bath tubs
- Connection joints between timber and tiles
- Connection joints in the kitchen
- Seal welds for display cabinets and glass blocks

FUNCTIONING

- Chemical base: 1-component silicone acetate
- Permanently elastic
- With fungicide
- Skin formation time: approx. 5 minutes
- Processing temperature: +5°C to +30°C
- Temperature resistance: -50°C to +120°C
- Permitted overall deformation: 25%
- Good chemical resistance
- Very good resistance to weather, ageing and UV
- Not paintable
- Selection table for substrates – see main catalogue

TECHNICAL DATA

Item	Art.-No.	Colour	Contents [ml]	Sales unit [pcs]				
DSSI TP (GB/E)	058515	transparent	280	12				
DSSI W (GB/E)	058516	white	280	12				

All-round adhesive gluing and sealing KD

The flexible adhesive and sealant for interior and exterior use.

Sheet metal coverings

Bonding and sealing aluminium profiles

BUILDING MATERIALS

- ABS
- Concrete
- Pumice
- Anodised layer
- Gypsum plasterboard
- Glass
- Wooden materials
- H-PVC
- Ceramics
- Clinker brick
- Plastics
- Copper
- Masonry
- Metals
- Natural stone (coloured variants)
- Polycarbonate and PMMA
- Polystyrene hard foam
- Aerated concrete
- Plaster
- Brick

ADVANTAGES

- The MS polymer® allows for an elastic adhesion for vibration-dampening and stress-compensating connections for demanding applications.
- The extremely high initial adhesion of 110 kg/m² (coloured variant) makes it possible to attach lots of components without the need for additional fixing, and thus reduces the amount of time required.
- The transparent variant is ideal for inconspicuous gluing and sealing, and guarantees an ideal appearance.

APPLICATIONS

Stress-compensating bonding and sealing of:

- Standard mirrors (coloured variant)
- Vibrating constructions
- Metal profiles
- Joints and seams in climate and ventilated constructions
- Kitchens and built-in furniture
- Stair treads and window sills
- Floor joints, connection joints in car body and vehicle construction

FUNCTION / ASSEMBLY

- Chemical base: One-component hybrid polymer
- Colours: white, grey, black, crystal clear
- Processing temperature +5°C to +35°C
- Setting time 5 to 10 minutes
- High initial adhesion of 110 kg/m² or 50 kg/m² for the crystal clear variant
- Fully functional after 1 to 3 days
- Temperature resistance: -40°C to +90°C
- Also bonds on a moist base material and is water resistant
- Suitable for bonding non-absorbent components (see TDS)
- Can be painted (see TDS)
- Free from solvents, MDI and silicone
- Very good resistance to weather, age and UV

TECHNICAL DATA

Item	Art.-No.	Contents [ml]	Type of packaging	Colour	Sales unit [pcs]			
KD-290 white (GB)	046915	290	Cartridge	white	12			
KD-290 crystal clear (D)	503317	290	Cartridge	crystal clear	12			
KD-290 white (D)	059389	290	Cartridge	white	12			
KD-290 grey (D)	503318	290	Cartridge	grey	12			
KD-290 black (D)	503319	290	Cartridge	black	12			
KD-290 (I)	046917	290	Cartridge	white	12			

Accessories sealants

KP M1

ADVANTAGES

- The handy, robust solid metal construction for standard cartridges up to 310 ml bears up against requirements on the construction site and, as such, is also suitable for professional use.
- The continuous in-feed allows for a precise dosage, making it easy to use.
- The slim shape of the device allows for an exact application, even in difficult to reach spots, thus offering a high level of flexibility

KP M2

ADVANTAGES

- The 17:1 transmission ratio makes extrusion rapid and energy-efficient even in the case of highly viscous materials, thus guaranteeing stress-free work.
- The robust design with the special, hardened drive block meets the tough requirements of a construction site and thus offers a long lifespan.
- The rotating cartridge shells make it possible to perfectly align the extrusion nozzle, and guarantee application-orientated work.

TECHNICAL DATA

Item	Art.-No.	Sales unit [pcs]						
KP M 1	053115	1						
KP M 2	053117	1						

ARTICLE INDEX – ASSORTMENT AFTER PAGE NUMBER

Type	Page
FGRS Plus	16
FGRS	18
FKS Plus	19
FRS Plus	20
FRS	22
FRSH	23
FRSN	24
FRS-F	25
FRSM	26
FRSM M10/M12/M16	27
KFT	28
FRS K	30
FRSP	32
FRSL	33
ETR	34
SGS	35
MS-L	38
ALK	40
AK 27/28	42
SV 27	42
FHS Clix/FHS Clix-N	43
BOL N	44
HK 27	44
HG 27	45
Clix MK	46
SF Q 27/ SF L 27	47
MW 27	48
TKR 27	49
MS	52
ALK / ALK Q	54
AK 38, 40	56
SV 38, 40	56
FHS Clix S	58, 83
HS 38	59
SM	60
HG 38	61
HK 38, 40	62
SF 38	63
TSF	64
MW	65
UW S	66, 87
WK	67, 88
SB	69, 114
TKR	70, 91
FUS	74
FCA	78
FCAM	80
FEC	81
FUF OC	81
FCN Clix	82
FCN	84
HK 41	85
SF	86
UHRS	89
VB	90
FSB 45°	92
FFF	93

Type	Page
FAF	94
FZF, FUF	95
FVS	100
FFPS, FFPK	108
GL	110
SBS	111
FSC 1	112
GLK	113
PDH / PDH K	115
LGS	119
LKHN / ZKHN	121
LRBN / LRB	122
EMS	123
TZ / TZH	124
LZ / LST	125
GPL, GPS, GPR	128
TKL / SS-TKL	129
G, GS	130
HED	132, 197
BFG	132
PV	133
SPS / BLR	133
AHB	134
SKS / U	135
MU / VM	136
AG	137
RAH	137
RD	138
RDM / GRD	138
MW	139
LLS	140
IK / IM	140
STST	141
DPP / DPF	142
SBB	142
GWB	143
LBV / LBK	144
ED	145
SZE	145
Wireclip	146
FUS hdg.	151
FCA hdg.	151
FUF OC 41 hdg.	152
FCN Clix P hdg.	152
SF L hdg.	153
FRS A2/A4	156
MS-L A2	157
ALK A2	157
FHS Clix A2	158
HG A2	158
MW A2	159
SF A2	159
FUS A2/A4	160
FCA A4	160
SF L A4	161
FAF A4	161
TKR A4	162

Type	Page
HK 41 A4	162
FCN Clix A4	163
STS A2/A4	163
G A2/A4	164
GS A4	164
VM A4	165
U A4	165
MU A4	166
SKS A4	166
MCE	170
KSU	172
LS	176
ZS / ES	177
SD	178
KB	179
SHA	181
NS / MNS	182
NSB	183
BN	184
RC	185, 186
FC	187
SCH	188
AM	190
BSM	191
WD, WST, UST, BO	196
WCN	199
WB	201
BU M H	202
AKM	202
UX	206
SX	209
K, KD, KDH, KDR, KM	212
FAZ II	215
FAZ II GS	219
FBN II	222
FBN II GS	227
FZEA II	229
EA II	232
FNA II	235
FHY	239
FBS	242, 245
FIS V, FIS EM, FIS P	249
PUP B3	250
PU 1/500, PU 1/750	251
PU 2/402	252
PU 2/403	253
PUP K2, PUP M3	254
PUP M4 BLACK	254
PUR 150, PUR 500	255
DSSA	256
DSSI	257
KD	258
KP M1, KP M2	259

ARTICLE INDEX – ASSORTMENT ALPHABETICALLY

Type	Page
AG	137
AHB	134
AK 27/28	42
AK 38, 40	56
AKM	202
ALK	40
ALK / ALK Q	54
ALK A2	157
AM	190
BFG	132
BN	184
BOL N	44
BSM	191
BU M H	202
Clix MK	46
DPP / DPF	142
DSSA	256
DSSI	257
EA II	232
ED	145
EMS	123
ETR	34
FAF	94
FAF A4	161
FAZ II	215
FAZ II GS	219
FBN II	222
FBN II GS	227
FBS	242, 245
FC	187
FCA	78
FCA A4	160
FCA hdg.	151
FCAM	80
FCN	84
FCN Clix	82
FCN Clix A4	163
FCN Clix P hdg.	152
FEC	81
FFF	93
FFPS, FFPK	108
FGRS	18
FGRS Plus	16
FHS Clix A2	158
FHS Clix S	58, 83
FHS Clix/FHS Clix-N	43
FHY	239
FIS V, FIS EM, FIS P	249
FKS Plus	19
FNA II	235
FRS	22
FRS A2/A4	156
FRS K	30
FRS Plus	20
FRS-F	25
FRSH	23
FRSL	33
FRSM	26
FRSM M10/M12/M16	27
FRSN	24
FRSP	32
FSB 45°	92
FSC 1	112
FUF OC	81
FUF OC 41 hdg.	152
FUS	74
FUS A2/A4	160
FUS hdg.	151
FVS	100
FZEA II	229
FZF, FUF	95
G A2/A4	164
G, GS	130
GL	110
GLK	113
GPL, GPS, GPR	128
GS A4	164
GWB	143
HED	132, 197
HG 27	45
HG 38	61
HG A2	158
HK 27	44
HK 38, 40	62
HK 41	85
HK 41 A4	162
HS 38	59
IK / IM	140
K, KD, KDH, KDR, KM	212
KB	179
KD	258
KFT	28
KP M1, KP M2	259
KSU	172
LBV / LBK	144
LGS	119
LKHN / ZKHN	121
LLS	140
LRBN / LRB	122
LS	176
LZ / LST	125
MCE	170
MS	52
MS-L	38
MS-L A2	157
MU / VM	136
MU A4	166
MW	65
MW	139
MW 27	48
MW A2	159
NS / MNS	182
NSB	183
PDH / PDH K	115
PU 1/500, PU 1/750	251
PU 2/402	252
PU 2/403	253
PUP B3	250
PUP K2, PUP M3	254
PUP M4 BLACK	254
PUR 150, PUR 500	5
PV	133
RAH	137
RC	185, 186
RD	138
RDM / GRD	138
SB	69, 114
SBB	142
SBS	111
SCH	188
SD	178
SF	86
SF 38	63
SF A2	159
SF L A4	161
SF L hdg.	153
SF Q 27/ SF L 27	47
SGS	35
SHA	181
SKS / U	135
SKS A4	166
SM	60
SPS / BLR	133
STS A2/A4	163
STST	141
SV 27	42
SV 38, 40	56
SX	209
SZE	145
TKL / SS-TKL	129
TKR	70, 91
TKR 27	49
TKR A4	162
TSF	64
TZ / TZH	124
U A4	165
UHRS	89
UW S	66, 87
UX	206
VB	90
VM A4	165
WB	201
WCN	199
WD, WST, UST, BO	196
Wireclip	146
WK	67, 88
ZS / ES	177